INTERNATIONAL MARITIME ORGANIZATION

4 ALBERT EMBANKMENT
LONDON SE1 7SR
Telephone: +44 (0)20 7735 7611 Fax: +44 (0)20 7587 3210

E

MSC.1/Circ.1630/Rev.1
3 December 2022

REVISED STANDARDIZED LIFE-SAVING APPLIANCE EVALUATION AND TEST REPORT FORMS (SURVIVAL CRAFT)

1 The Maritime Safety Committee, at its 102nd session (4 to 11 November 2020), approved the *Revised standardized life-saving appliance evaluation and test report forms*.

2 The original forms, as set forth in the *Standardized life-saving appliance evaluation and test report forms* (MSC/Circ.980) and its addenda, were developed on the basis of the requirements of the International Life-Saving Appliance (LSA) Code and the *Revised recommendation on testing of life-saving appliances* (resolution MSC.81(70)) by the Maritime Safety Committee, at its seventy-third session in 2001, with a view to providing guidance on how to conduct tests, record test data and verify tests. The Committee adopted several amendments to the LSA Code and to resolution MSC.81(70). These amendments were incorporated in the original forms which, due to their volume, were presented in six separate circulars, i.e. MSC.1/Circ.1628, MSC.1/Circ.1629, MSC.1/Circ.1630, MSC.1/Circ.1631, MSC.1/Circ.1632 and MSC.1/Circ.1633, pertaining to the equipment addressed in chapters II to VII of the LSA Code, respectively.

3 In order to address the need to update the references to the withdrawn standards in "Technical tests on the membrane", "Porosity" and "Oil resistance" in the *Revised standardized life-saving appliance evaluation and test report forms (survival craft)* (MSC.1/Circ.1630), the Committee, at its 106th session (2 to 11 November 2022), approved amendments to the above-mentioned evaluation and test report forms, for dissemination as MSC.1/Circ.1630/Rev.1. The text of the *Revised standardized life-saving appliance evaluation and test report forms (survival craft)* is set out in the annex.

4 The forms annexed to this circular apply to the equipment addressed in chapter IV of the LSA Code, i.e. survival craft (inflatable liferafts; rigid liferafts; components for survival craft; davit-launched lifeboats; and free-fall lifeboats).

5 The use of the revised forms will continue to be of benefit to Administrations and other parties, such as manufacturers, test facilities, owners and surveyors, and will be a major help in mutually accepting the type approval of appliances approved by other Administrations.

6 Member Governments are invited to bring the annexed, revised forms to the attention of all parties concerned with approving, manufacturing and testing life-saving appliances and to encourage them to use the forms.

7 This circular supersedes MSC.1/Circ.1630.

***

NEW TECHNOLOGIES FOR GREENER SHIPPING

ANNEX

REVISED STANDARDIZED LIFE-SAVING APPLIANCE EVALUATION AND TEST REPORT FORMS (SURVIVAL CRAFT)

INTRODUCTION

Reference

These standardized life-saving appliance evaluation and test report forms have been revised on the basis of the requirements of the International Life-Saving Appliance (LSA) Code, as amended through resolution MSC.425(98), the *Revised recommendation on testing of life-saving appliances* (resolution MSC.81(70)), as amended through resolution MSC.427(98), and the *Recommendation on means of rescue on ro-ro passenger ships* (MSC/Circ.810).

Status

In general, the tests described in the Revised recommendation (resolution MSC.81(70)) constitute the test procedures and the LSA Code sets the acceptance criteria. The evaluation and test report forms are guidelines on how to conduct tests, record test data and verify tests. These forms are not intended to change the standards given in the LSA Code and the Revised recommendation, as amended. In the case of inconsistency between the forms and the LSA Code or the Revised recommendation, the text of the Code/resolution should prevail over that of the forms.

Layout

Each Administration may use electronically distributed evaluation and test report forms as the basis for customizing the layout to reflect the profile of the approving body, without changing the original contents.

Internal references

The evaluation and test report forms should be stand-alone documents. Therefore, all internal references in the original text from the LSA Code or the Revised recommendation have been replaced by either the full-length text or a reference to other relevant evaluation and test report forms. However, in some of the forms, external references are kept for updating purposes.

Documentation of tests

For approval purposes, all detailed records of test data are to be enclosed with the report forms.

Verification of tests

Each test is to be verified passed or failed by an Administration representative's initials (e.g. recognized organization or surveyor) and date of testing. Each page is to be verified on completion by the Administration representative's signature and its date of completion.

Reporting of type approval

To facilitate unified reporting procedures, the completed evaluation and test report forms are to be seen as a documented verification of required type approval tests for each type of equipment. When documentation of type approval is required by a third party, the verified evaluation and test report forms should constitute the complete documentation of the type approval together with the relevant approval certificates.

REVISED STANDARDIZED LIFE-SAVING APPLIANCE EVALUATION AND TEST REPORT FORMS (SURVIVAL CRAFT)

TABLE OF CONTENTS

LSA Code chapter IV (Survival craft) – Equipment:

4.1 Inflatable liferafts

4.2 Rigid liferafts

4.3 Components for survival craft
- 4.3.1 Hydrostatic release units
- 4.3.2 Lifeboat and rescue boat inboard engines
- 4.3.3 Lifeboat buoyant material
- 4.3.4 Inflatable liferaft materials
- 4.3.5 Searchlights for lifeboats and rescue boats
- 4.3.6 Survival craft position indicating lights

4.4 Davit-launched lifeboats

4.5 Free-fall lifeboats

4 SURVIVAL CRAFT

4.1 INFLATABLE LIFERAFTS

EVALUATION AND TEST REPORT

4.1.1 Submitted drawings, reports and documents

4.1.1.1 General data and specifications

4.1.2 Quality assurance

4.1.3 Visual inspection

4.1.4 Drop test

4.1.5 Jump test

4.1.6 Weight test

4.1.7 Towing test

4.1.8 Mooring out tests

4.1.9 Liferaft painter system test

4.1.10 Weak link strength test

4.1.11 Loading and seating test

4.1.12 Boarding test

4.1.13 Closing arrangement test

4.1.14 Stability test

4.1.15 Manoeuvrability test

4.1.16 Swamp test

4.1.17 Canopy closure test

4.1.18 Buoyancy of float-free liferaft tests

4.1.19 Damage test

4.1.20 Righting test (conventional liferaft)

4.1.21 Inflation test

4.1.22 Pressure test

4.1.23 Detailed inspection

4.1.24 Lifting components strength test

4.1.25 Impact test

4.1.26 Drop test

4.1.27 Davit-launched liferaft boarding test

4.1.28 Davit-launched inflatable liferafts – Strength test

4.1.29 Cold overload test

4.1.30 Lowering abrasion test

4.1.31 Self-righting test (self-righting liferafts only)

4.1.32 Submergence test (self-righting liferafts only)

4.1.33 Wind velocity test

4.1.34 Self-draining test (self-righting liferafts only)

4.1.35 Seam strength test

4.1 INFLATABLE LIFERAFTS

EVALUATION AND TEST REPORT

Manufacturer	
Type	
Date	
Place	
Name Surveyor printed	
Signature	
Approving Organization	

Inflatable liferafts	Manufacturer: _____ Model: _____ Lot/Serial Number: _____	Date: _____ Time: _____ Surveyor: _____ Organization: _____

4.1.1 Submitted drawings, reports and documents

Submitted drawings and documents			**Status**
Drawing No.	**Revision No. & date**	**Title of drawing**	

Submitted reports and documents			**Status**
Report/Document No.	**Revision No. & date**	**Title of report/document**	
		Maintenance Manual -	
		Operations Manual -	

Inflatable liferafts	Manufacturer: _____ Model: _____ Lot/Serial Number: _____	Date: _____ Time: _____ Surveyor: _____ Organization: _____

4.1.1.1 General data and specifications	**Regulations: -**
Cylinder:	
Release head:	
Fabric:	

Inflatable liferafts	Manufacturer: _____ Model: _____ Lot/Serial Number: _____	Date: _____ Time: _____ Surveyor: _____ Organization: _____

4.1.2 Quality assurance	**Regulations: MSC.81(70)2/1.1,1.2**
Except where all appliances of a particular type are required by chapter III of the International Convention for the Safety of Life at Sea, 1974, as amended or the International Life-Saving Appliance (LSA) Code, to be inspected, representatives of the Administration should make random inspections of manufacturers to ensure that the quality of life-saving appliances and materials used comply with the specification of the approved prototype life-saving appliance. Manufacturers should be required to institute a quality control procedure to ensure that life-saving appliances are produced to the same standard as the prototype life-saving appliance approved by the Administration and to keep records of any production tests carried out in accordance with the Administration's instructions.	Quality assurance Standard Used: Quality assurance Procedure: Quality assurance Manual: Description of System: Quality assurance System acceptable: Yes/No Comments/Observations:

Inflatable liferafts	Manufacturer: _____ Model: _____ Lot/Serial Number: _____	Date: _____ Time: _____ Surveyor: _____ Organization: _____

4.1.3 Visual inspection		**Regulations: LSA Code IV/4.2; MSC.81(70) 1/5.14**
Test Procedure	Acceptance Criteria	Significant Test Data
The liferaft should be subjected to a thorough visual inspection. The following items should be confirmed during the inspection: - proper workmanship - suitable materials - rot proof, corrosion resistant - not affected by seawater, oil or fungal attack - resistant to sunlight - highly visible colour - retro reflective tape to be as per resolution A.658(16) - safely used in a seaway - certification - whether the light is activated when carrying out insulation test	All materials should be properly certificated Be of an international or vivid reddish orange, or at a comparably highly visible colour on all parts where this will assist detection at sea	Passed_____ Failed _____ Comments/Observations

Inflatable liferafts	Manufacturer: _____ Model: _____ Lot/Serial Number: _____	Date: _____ Time: _____ Surveyor: _____ Organization: _____

4.1.4 Drop test		**Regulations: LSA Code IV/4.1.1.2; MSC.81(70) 1/5.1.1 – 5.1.4.2**
Test Procedure	Acceptance Criteria	Significant Test Data
Each type of liferaft should be subjected to a minimum of two drop tests. Where the liferaft in its operational condition is packed in a container or valise, one such test should be carried out with the liferaft packed in each type of container or valise in which the manufacturer proposes to mark it. The liferaft, in the operational packed condition, should be suspended and then dropped from a height of 18 m into the water. If it is to be stowed at a height greater than 18 m, it should be dropped from the height at which it is to be stowed. The free end of the painter should be attached to the point of suspension so that it pays out as the liferaft drops, thus simulating actual conditions. The liferaft should be left floating for 30 min. It should then be inflated. The liferaft should be lifted from the water to permit thorough inspection of the liferaft, the contents of the equipment container and, where applicable, the container or valise.	The liferaft should inflate upright and in the time prescribed in 4.1.21. Damage to the container or valise, if the liferaft is normally within it when launched, is acceptable provided the Administration is satisfied that it would not be a hazard to the liferaft. Damage to any item of equipment is acceptable subject to the Administration being satisfied that the operational efficiency has not been impaired. Damage to freshwater receptacles may be accepted provided they do not leak. However, for drop tests from heights exceeding 18 m leakage from up to 5% of the receptacles may be accepted provided that: the equipment list for the liferaft specifies the carriage of 5% excess water or means of desalination adequate to produce an equivalent amount; or the water receptacles are contained in a waterproof overwrap. * If any additional equipment was placed in the liferaft for this test, e.g. SART, state type and condition of the equipment after the test. Unless the liferaft is a davit-launched type or to be fitted on a passenger ship, does the sea anchor deploy automatically upon inflation?	Container details: - Type of emergency pack Inflation system details: Height of drop _____ m Painter length _____ m Floating position: Inflation times: Container open after_____ sec Boardable after _____ sec Relief valves venting: _____ sec Internal lights activate after _____ sec External lights activate after _____ sec Condition: Container Liferaft *Equipment Passed _____ Failed _____ NA Comments/Observations

Inflatable liferafts	Manufacturer: _____ Model: _____ Lot/Serial Number: _____	Date: _____ Time: _____ Surveyor: _____ Organization: _____

4.1.5 Jump test		**Regulations: LSA Code IV/4.1.1.3; MSC.81(70) 1/5.2.1 - 5.2.4**
Test Procedure	Acceptance Criteria	Significant Test Data
It should be demonstrated that a person can jump on to the liferaft, with and without the canopy erected, from a height above the floor of at least 4.5 m without damaging the liferaft. The test subject should weigh not less than 82.5 kg and should be wearing hard bottom shoes with smooth soles and no protruding nails. The number of jumps performed should be equal to the total number of persons for which the liferaft is to be approved. The jump test may be simulated by dropping a suitable and equivalent mass, arranged so as to impact the liferaft with shoes as described in the above paragraph. Unless the configurations of both sides of a canopied reversible liferaft are identical, this test should be repeated for both sides of the liferaft.	There should be no torn fabric, or damage to seams as a result of the test.	Number of jumps _____ Height of jump _____ Weight of dummy _____ Condition of raft during and after test: Tested both sides? Yes _____ No _____ Comments/Observations Passed _____ Failed _____

4.1.6 Weight test		**Regulations: LSA Code IV/4.1.2.2; MSC.81(70) 1/5.3**
Test Procedure	Acceptance Criteria	Significant Test Data
The fully packed liferaft container should be weighed to determine whether its mass exceeds 185 kg. The weight test should be performed on the heaviest variation of the liferaft, considering different containers and equipment packs, which may be used. If the mass exceeds 185 kg, the different combinations of containers and equipment packs should be weighed to determine which will and which will not exceed 185 kg.		Type A Type B Emergency pack type: _____ _____ Measured liferaft weight _____ _____kg Comments/Observations

Inflatable liferafts	Manufacturer: _____ Model: _____ Lot/Serial Number: _____	Date: _____ Time: _____ Surveyor: _____ Organization: _____

4.1.7 Towing test		**Regulations: LSA Code IV/4.1.1.4; MSC.81(70) 1/5.4**
Test Procedure	Acceptance Criteria	Significant Test Data
It should be demonstrated by towing that the fully loaded and equipped liferaft is capable of being satisfactorily towed at speeds of up to 3 knots in calm water. Towing should be by a line attached to the liferaft's towing connection. The sea anchor should be streamed while the liferaft is towed. The liferaft should be towed for a distance of at least 1 km. Record the towing strain at 2 knots and 3 knots and include on the Type Approval certificate.	It should be shown that the liferaft can be satisfactorily towed at a speed of up to 3 knots with the anchor streamed without significant damage.	Speed during test _____knots Sea anchor streamed: Yes_____ No _____ Raft towing connections: Distance covered: Total Load in raft: Towing strain at 2 knots _____ kN Towing strain at 3 knots _____ kN Sea state _____ Comments/Observations Passed _____ Failed _____

Inflatable liferafts	Manufacturer: _____ Model: _____ Lot/Serial Number: _____	Date: _____ Time: _____ Surveyor: _____ Organization: _____

4.1.8 Mooring out tests		**Regulations: LSA Code IV/4.1.1.1; MSC.81(70) 1/5.5**
Test Procedure	Acceptance Criteria	Significant Test Data
The liferaft should be loaded with mass equal to the mass of the total number of persons for which it is to be approved and its equipment and moored in a location at sea or in a seawater harbour. The liferaft should remain afloat in that location for 30 days. In the case of an inflatable liferaft, the pressure may be topped up once a day using the manual pump; however, during any 24 h period the liferaft should retain its shape.	The liferaft should not sustain any damage that would impair its performance. After this test, the inflatable liferaft should be subjected to the pressure test prescribed in 4.1.22.	Location _____ Mooring out period _____ days Number of times pressure topped up and dates:_____ Condition of liferaft: Pressure test results: Comments/Observations Pressure test results: _____ Passed _____ Failed _____

4.1.9 Liferaft painter system test		**Regulations: LSA Code IV/4.1.6.1, 4.1.3.2; MSC.81(70) 1/5.6**
Test Procedure	Acceptance Criteria	Significant Test Data
The painter system including attachments should be tensile tested.	Liferaft painter system and attachments should have a breaking strain as follows: Not less than 7.5 kN for liferafts to carry up to 8 persons Not less than 10.0 kN for liferafts to carry 9 to 25 persons Not less than 15.0 kN for liferafts to carry 26 persons or more	Number of persons: - Testing strain on painter system: Comments/Observations Passed _____ Failed _____

Inflatable liferafts	Manufacturer: _____ Model: _____ Lot/Serial Number: _____	Date: _____ Time: _____ Surveyor: _____ Organization: _____

4.1.10 Weak link strength test		**Regulations: LSA Code IV/4.1.6.2; MSC.81(70) 1/5.15**
Test Procedure	Acceptance Criteria	Significant Test Data
The weak link should be tensile tested.	A weak link in the painter system should have a breaking strain of 2.2 ± 0.4 kN and not be broken by the force required to pull the painter from the liferaft container. (Refer to HRU test form 4.3.1.11.) If applicable, be of sufficient strength to permit the inflation of the liferaft.	Measured breaking strain of weak link: _____ kN Comments/Observations Passed _____ Failed _____

4.1.11 Loading and seating test		**Regulations: LSA Code IV/4.2.3; MSC.81(70) 1/5.7**
Test Procedure	Acceptance Criteria	Significant Test Data
The freeboard of the liferaft in the light condition, including its full equipment but no personnel, should be recorded. The freeboard of the liferaft should again be recorded when the number of persons for which the liferaft is to be approved, having an average mass of 82.5 kg, and each wearing immersion suit and a lifejacket, have boarded and are seated. It should be established that all the seated persons have sufficient space and headroom and it should be demonstrated that the various items of equipment can be used within the life raft in this condition and, in the case of an inflated liferaft, with the floor inflated. Unless the configurations of both sides of a canopied reversible liferaft are identical, this test should be repeated for both sides of the liferaft.	All the seated persons should have sufficient space and headroom and the various items of equipment can be used within the liferaft in this condition and, in the case of an inflated liferaft, with the floor inflated. The freeboard, when loaded with the mass of the number of persons for which it is to be approved and its equipment, with the liferaft on an even keel and, in the case of an inflatable liferaft, with the floor not inflated, should not be less than 300 mm.	Type of lifejackets used? Inherent buoyancy_____ Inflatable _____ Immersion suits used? Insulated _____ Uninsulated _____ Freeboards: Light 12 o'clock _____ mm 3 o'clock _____ mm 6 o'clock _____ mm 9 o'clock _____ mm Loaded 12 o'clock _____ mm 3 o'clock _____ mm 6 o'clock _____ mm 9 o'clock _____ mm Number of persons seated _____ Equipment accessible and usable? YES_____ NO_____ Comments/Observations Passed _____ Failed _____

Inflatable liferafts	Manufacturer: _____ Model: _____ Lot/Serial Number: _____	Date: _____ Time: _____ Surveyor: _____ Organization: _____

4.1.12 Boarding test		**Regulations: LSA Code IV/4.2.4; MSC.81(70) 1/5.8**
Test Procedure	Acceptance Criteria	Significant Test Data
The boarding test should be carried out in a swimming pool by a team of not more than four persons who should be of mature age and of differing physiques as determined by the Administration. Preferably they should not be strong swimmers. For this test they should be clothed in shirt and trousers or a boiler suit and should wear approved lifejackets suitable for an adult. They must each swim about 100 m before reaching the liferaft for boarding. There must be no rest period between the swim and the boarding attempt. Boarding should be attempted by each person individually with no assistance from other swimmers or persons already in the liferaft. The water should be of a depth sufficient to prevent any external assistance when boarding the liferaft. If the liferaft is of the canopied reversible type, then both sides should be tested, unless the configuration of both sides are identical.	The arrangements will be considered satisfactory if three of the persons board the liferaft unaided and the fourth boards with the assistance of any of the others.	Record particulars of persons: Age Height Weight P1 _____Y _____m_____kg P2 _____Y _____m_____kg P3 _____Y _____m_____kg P4 _____Y _____m_____kg Boarded unaided: _____ persons Boarded aided: _____ persons Comments/Observations Passed _____ Failed _____

Inflatable liferafts	Manufacturer: _____ Model: _____ Lot/Serial Number: _____	Date: _____ Time: _____ Surveyor: _____ Organization: _____

4.1.13 Closing arrangement test		**Regulations: LSA Code IV/4.1.1.5.3; MSC.81(70) 1/5.8**
Test Procedure	Acceptance Criteria	Significant Test Data
The boarding test should be repeated with persons clothed in immersion suits and lifejackets. After the boarding test a person clothed in approved immersion suit should demonstrate that the entrance can be easily and quickly closed in 1 minute and can be easily and quickly opened from inside and outside in 1 minute. If the liferaft is of the canopied reversible type, then both sides should be tested, unless the configuration of both sides are identical.	3 out of 4 persons wearing immersion suit and lifejackets must board the liferaft unaided. The entrance should be easily closed in less than 1 min. by a person wearing an approved immersion suit. The entrance should be easily opened from inside in less than 1 min. by a person wearing an approved immersion suit. The entrance should be easily opened from outside in less than 1 min. by a person wearing an approved immersion suit.	Record particulars of persons: Age Height Weight P1 _____Y _____m _____kg P2 _____Y _____m_____kg P3 _____Y _____m_____kg P4 _____Y_____m_____kg Boarded unaided: _____ persons Boarded aided: _____ persons Closing time: _____ sec Open time inside: _____ sec Open time outside: _____ sec Comments/Observations Passed _____ Failed _____

Inflatable liferafts	Manufacturer: _____ Model: _____ Lot/Serial Number: _____	Date: _____ Time: _____ Surveyor: _____ Organization: _____

4.1.14 Stability test		**Regulations: LSA Code IV/4.2.5; MSC.81(70) 1/5.9.1 & .2**
Test Procedure	Acceptance Criteria	Significant Test Data
.1 The number of persons for which the liferaft is to be approved should be accommodated on one side and then at one end and in each case the freeboard should be recorded. Under these conditions the freeboard should be such that there is no danger of the liferaft being swamped. .2 The stability of the liferaft during boarding may be ascertained as follows: Two persons each wearing approved lifejackets should board the empty liferaft. It should then be demonstrated that the two persons in the liferaft can readily assist from the water a third person who is required to feign unconsciousness. The third person must have his back towards the entrance so that he cannot assist the rescuers.	Each freeboard measurement should be taken from the waterline to the top surface of the uppermost main buoyancy tube at its lowest point. It should be demonstrated that the water pockets adequately counteract the upsetting moment on the liferaft and there is no danger of the liferaft capsizing.	Freeboards with all persons on one side: 12 o'clock_____mm 3 o'clock_____mm 6 o'clock_____mm 9 o'clock_____mm Observations when boarding: persons: _____ unconscious person:_____ Effect of water pockets: Comments/Observations Passed _____ Failed _____

Inflatable liferafts	Manufacturer: _____ Model: _____ Lot/Serial Number: _____	Date: _____ Time: _____ Surveyor: _____ Organization: _____

4.1.15 Manoeuvrability test		**Regulations: LSA Code IV/4.1.5.1.6; MSC.81(70) 1/5.10**
Test Procedure	Acceptance Criteria	Significant Test Data
It should be demonstrated that with the paddles provided, the liferaft is capable of being propelled when fully laden in calm conditions over a distance of at least 25 m.	The liferaft should be capable of being propelled when fully laden in calm conditions over a distance of at least 25 m.	Distance manoeuvred:_____m Comments/Observations Passed _____ Failed _____

4.1.16 Swamp test		**Regulations: LSA Code; MSC.81(70) 1/5.11**
Test Procedure	Acceptance Criteria	Significant Test Data
It should be demonstrated that the liferaft, when fully swamped, is capable of supporting its full equipment and the number of persons for which it is to be approved. During this test self-draining arrangements fitted in the floor of the liferaft are to be closed to prevent the ingress of water.	The liferaft when fully swamped, should be capable of supporting its full equipment and the number of persons for which it is to be approved. The liferaft should not seriously deform in this condition. Unless the configuration of both sides of a canopied reversible liferaft are identical, this test should be repeated for both sides of the liferaft.	Loaded liferaft swamped Freeboards: 12 o'clock _____ mm 3 o'clock _____ mm 6 o'clock _____ mm 9 o'clock _____ mm Deformation _____ If self-bailing, time to self-bail: _____ min Comments/Observations Passed _____ Failed _____

Inflatable liferafts	Manufacturer: _____ Model: _____ Lot/Serial Number: _____	Date: _____ Time: _____ Surveyor: _____ Organization: _____

4.1.17 Canopy closure test		**Regulations: LSA Code IV/4.1.1.5; MSC.81(70) 1/5.12**
Test Procedure	Acceptance Criteria	Significant Test Data
To ensure the effectiveness of the canopy closures in preventing water entering the liferaft, the efficiency of the closed entrances should be demonstrated by means of a hose test or by any other equally effective method. The requirement for the hose test is that about 2,300 l of water per minute be directed at and around the entrances through a 63.5 mm hose from a point 3.5 m away and 1.5 m above the level of the buoyancy tubes for a period of 5 min.	The accumulation of water inside the liferaft should not exceed 4 l. Unless the configuration of both sides of a canopied reversible liferaft are identical, this test should be repeated for both sides of the liferaft.	Capacity of water hose____l/min Condition of canopy during test: Liters of water accumulated Comments/Observations Passed _____ Failed _____

4.1.18 Buoyancy of float-free liferafts test		**Regulations: LSA Code; MSC.81(70) 1/5.13**
Test Procedure	Acceptance Criteria	Significant Test Data
It should be demonstrated that the liferafts packed in containers, which are float-free, have sufficient inherent buoyancy to inflate the liferaft by means of the actuating line in the event of the ship sinking. The combination of equipment and container or valise should be that which produces the maximum packed weight.	The liferaft packed in container should have sufficient inherent buoyancy to inflate the liferaft by means of the actuating line in the event of the ship sinking.	Comments/Observations Passed _____ Failed _____

Inflatable liferafts	Manufacturer: _____ Model: _____ Lot/Serial Number: _____	Date: _____ Time: _____ Surveyor: _____ Organization: _____

4.1.19 Damage test		**Regulations: LSA Code; MSC.81(70) 1/5.17.1**
Test Procedure	Acceptance Criteria	Significant Test Data
It should be demonstrated that, in the event of any one of the buoyancy compartments being damaged or failing to inflate, the intact compartment or compartments should support, with positive freeboard over the liferaft's periphery, the number of persons for which the liferaft is to be approved. This can be demonstrated with persons each having a mass of 82.5 kg and seated in their normal positions or by an equally distributed mass.	The intact compartments should support, with positive freeboard over the liferaft's periphery, the number of persons for which the liferaft is to be approved, with any one of the buoyancy compartments deflated. _____=> Compartment deflated: _____ Freeboards: 12 o'clock _____ mm 3 o'clock _____ mm 6 o'clock _____ mm 9 o'clock _____ mm Compartment deflated: _____ Freeboards: 12 o'clock _____ mm 3 o'clock _____ mm 6 o'clock _____ mm 9 o'clock _____ mm	Compartment deflated: _____ Freeboards: 12 o'clock _____ mm 3 o'clock _____ mm 6 o'clock _____ mm 9 o'clock _____ mm Compartment deflated: _____ Freeboards: 12 o'clock _____ mm 3 o'clock _____ mm 6 o'clock _____ mm 9 o'clock _____ mm Comments/Observations Passed _____ Failed _____

Inflatable liferafts	Manufacturer: _____ Model: _____ Lot/Serial Number: _____	Date: _____ Time: _____ Surveyor: _____ Organization: _____

4.1.20 Righting test (conventional liferaft)		**Regulations: LSA Code IV/4.2.5.2; MSC.81(70) 1/5.17.2.1 - .4**
Test Procedure	Acceptance Criteria	Significant Test Data
For this test the liferaft should be inverted so as to simulate inverted inflation. .1 The inflatable liferaft should be loaded with its heaviest equipment pack. All of the entrances, ports, and other openings in the liferaft canopy should be open in order to allow the infiltration of water into the canopy when capsized. .2 The canopy of the liferaft should then be completely filled with water, if necessary, by partially collapsing the canopy support, or alternatively the uninflated liferaft should be flaked out onto the surface of the water upside down and inflation initiated. An automatically self-righting liferaft should self-right in this condition and should become boardable in the upright position within 1 min after the start of the test. If the inflatable liferaft, other than automatically self-righting liferafts, does not self-right, it should be allowed to remain in an inverted position for at least 10 min before righting is attempted.	The righting arrangements will be considered satisfactory if each person rights the liferaft unaided. There should be no damage to the structure of the inflatable liferaft, and the equipment pack should remain secured in its place. (See form 4.1.31 for self-righting)	

Inflatable liferafts	Manufacturer: _____ Model: _____ Lot/Serial Number: _____	Date: _____ Time: _____ Surveyor: _____ Organization: _____

4.1.20 Righting test (conventional liferaft) (continued)		**Regulations: LSA Code IV/4.2.5.2; MSC.81(70) 1/5.17.2.1 - .4**
Test Procedure	Acceptance Criteria	Significant Test Data
.3 The righting test should be carried out by the same team of persons required for the boarding test similarly clothed and wearing lifejackets and after completing the swim required in 4.1.12. At least one of the persons righting the inflatable liferaft should weigh less than 82.5 kg. Each person should attempt to right the liferaft unaided. The water should be of sufficient depth to give no external assistance to the swimmers when mounting the inverted liferaft.	The righting arrangements will be considered satisfactory if each person rights the liferaft unaided. There should be no damage to the structure of the inflatable liferaft, and the equipment pack should remain secured in its place. (See form 4.1.31 for self-righting)	1st person righting test _____ 2nd person righting test _____ 3rd person righting test _____ 4th person righting test _____ results with pack A and B Damage to raft _____ Details of persons Comments/Observations Passed _____ Failed _____

Inflatable liferafts	Manufacturer: _____ Model: _____ Lot/Serial Number: _____	Date: _____ Time: _____ Surveyor: _____ Organization: _____

4.1.21 Inflation test		**Regulations: LSA Code; MSC.81(70) 1/ 5.17.3 to 5.17.6**
Test Procedure	Acceptance Criteria	Significant Test Data
A liferaft, packed in each type of container, should be inflated by pulling the painter and the time recorded: - .1 for it to become boardable, i.e. when buoyancy tubes are inflated to full shape and diameter. .2 for the cover to be erect; and .3 for the liferaft to reach its full operational pressure when tested: .1 at an ambient temperature of between 18°C and 20°C; .2 at a temperature of -30°C; and .3 at a temperature of +65°C. For the inflation test at -30°C the packed liferaft should be kept at room temperature for at least 24 h, then placed in a refrigerated chamber at a temperature of -30°C for 24 h prior to inflation by pulling the painter. Two liferafts should be subject to an inflation test at this temperature.	When inflated in an ambient temperature of between 18°C and 20°C it should achieve total inflation in not more than 1 min. In the case of automatic self-righting liferaft, the liferaft should achieve total inflation and be boardable in the upright position in not more than 1 min, regardless of the orientation in which the liferaft inflates. When inflated at -30°C the liferaft should reach working pressure in 3 min. There should be no seam slippage, cracking, or other defect in the liferaft and it should be ready for use after the tests. When inflated at +65°C the gas pressure relief valves must be of sufficient capacity to prevent damage to the liferaft by excess pressure and to prevent the maximum pressure during the inflation from reaching twice the re-seat pressure of the release valve. There must be no seam slippage, cracking or other defect in the liferaft. The force to pull out the painter should not be more than 150 N.	1) Force to pull the painter _____ N Inflation times: Air temperature _____°C Container open _____sec Boardable _____sec Relief valves: Upper open _____sec Lower open _____sec Lights int./ext. _____/_____sec Working Pressure _____ MPa 2) Cold temperature _____°C Hours: _____ h Inflation times: - Raft 1 Raft 2 Air temperature _____°C Container open _____sec Boardable _____sec Relief valves: Upper open _____sec Lower open _____sec Lights int./ext. _____/_____sec Working Pressure _____ MPa 3) Hot temperature _____°C Hours: _____ h Inflation times: - Air temperature _____°C Container open _____sec Boardable _____sec Relief valves: Upper open _____sec Lower open _____sec

4.1.21 Inflation test		**Regulations: LSA Code; MSC.81(70) 1/ 5.17.3 to 5.17.6**
Test Procedure	Acceptance Criteria	Significant Test Data
		Lights int./ext. _____/_____sec Working Pressure _____ Mpa Peak pressure _____ Mpa Comments/Observations Passed _____ Failed _____

Inflatable liferafts	Manufacturer: _____ Model: _____ Lot/Serial Number: _____	Date: _____ Time: _____ Surveyor: _____ Organization: _____

4.1.21 Inflation test (continued)		**Regulations: LSA Code; MSC.81(70) 1/5.17.4 - .6**
Test Procedure	Acceptance Criteria	Significant Test Data
For the inflation test at +65°C the packed liferaft should be kept at room temperature for at least 24 h, then placed in a heating chamber at a temperature of +65°C for not less than 7 h prior to inflation by pulling the painter. Force to pull out painter should be measured at ambient temperature.		Hot temperature: _____ °C Hours:_h Inflation times: - Air temperature__°C Container open__sec Boardable: _____ sec Relief valves: Upper open: _____sec Lower open: _____ sec Lights int./ext.___/ sec Working Pressure: _____ Mpa Peak pressure: _____ Mpa Comments/Observations: Passed: _____ Failed: _____

Inflatable liferafts	Manufacturer: _____ Model: _____ Lot/Serial Number: _____	Date: _____ Time: _____ Surveyor: _____ Organization: _____

4.1.22 Pressure test		**Regulations: LSA Code; MSC.81(70) 1/5.17.7 & 5.17.8**
Test Procedure	Acceptance Criteria	Significant Test Data
Each inflatable compartment in the liferaft should be tested to a pressure equal to three times the working pressure. Each pressure relief valve should be made inoperative, compressed air should be used to inflate the inflatable liferaft and the inflation source removed. The test should continue for at least 30 min. The measurement of pressure drop due to leakage can be started when it has been assumed that compartment material has been completely stretched due to the inflation pressure and achieved equilibrium. The term "operational pressure" has the same meaning as the term "working pressure"; i.e. the pressure determined by the designed reseat pressure of the relief valves, if fitted, except that, if the actual reseat pressure of the relief valves, determined by testing, exceeds the designed reseat pressure by more than 15%, the higher figure should be used.	The pressure should not decrease by more than 5% as determined without compensating for temperature and atmospheric pressure changes, and there should be no seam slippage, cracking or other defects in the liferaft.	Design WP _____ Design temp _____°C Design atmos. _____bar 3 times WP _____ Pressure drop after 30 min _____ Above should cover each compartments 1, 2 3, etc. Damage recorded: _____ _____ Floor: Design pressure _____ Pressure drop after 1 hour _____ Comments/Observations Passed: _____ Failed: _____

Inflatable liferafts	Manufacturer: _____ Model: _____ Lot/Serial Number: _____	Date: _____ Time: _____ Surveyor: _____ Organization: _____

4.1.23 Detailed inspection		**Regulations: LSA Code IV/4.2; MSC.81(70) 1/5.14**
Test Procedure	Acceptance Criteria	Significant Test Data
The liferaft should be subjected to a detailed inspection to verify that it complies with to requirements of the LSA Code.	The liferaft should comply with the requirements of the LSA Code in all respects including: interior not to cause discomfort to occupants at least one viewing port means for collection rainwater sufficient headroom 8 persons at least two entrances equipment to be stowed inside liferaft, but capable of floating at least 30 minutes in water without damage to content at least one boarding ramp means to assist a person to pull themselves into the liferaft container markings marking on raft.	If provided, boarding ladders: interior not to cause discomfort to occupants _____ at least one viewing port _____ means for collection rainwater _____ sufficient headroom _____ 8 persons at least two entrances _____ equipment to be stowed inside liferaft, but capable of floating at least 30 minutes in water without damage to content _____ at least one boarding ramp _____ means to assist a person to pull themselves into the liferaft _____ container markings _____ marking on raft _____ means to change ship's name & Port of Registry without opening containers? YES/NO Comments/Observations Passed _____ Failed _____

Inflatable liferafts	Manufacturer: _____ Model: _____ Lot/Serial Number: _____	Date: _____ Time: _____ Surveyor: _____ Organization: _____

4.1.24 Lifting components strength test		**Regulations: LSA Code IV/4.2.8; MSC.81(70) 1/5.16.1**
Test Procedure	Acceptance Criteria	Significant Test Data
The breaking strength of the webbing or rope and the attachments to the liferaft used for the lifting bridle should be established by tests on three separate pieces of each different item.	The combined strength of the lifting bridle components should be at least six times the mass of the liferaft when loaded with the number of persons for which it is to be approved and its equipment.	Combined strength of lifting bridle components: Mass of liferaft when loaded with the number of persons for which it is to be approved: _____ kg Calculated safety factor: _____ Method of determining safety factor: Comments/Observations Passed: _____ Failed: _____

4.1.25 Impact test		**Regulations: LSA Code; MSC.81(70) 1/5.16.2**
Test Procedure	Acceptance Criteria	Significant Test Data
The liferaft should be loaded with a mass equal to the mass of the number of persons for which it is to be approved and its equipment. With the liferaft in a free hanging position it should be pulled laterally to a position so that when released it will strike a rigid vertical surface at a velocity of 3.5 m/s. The liferaft should then be released to impact against the rigid vertical surface. Note: The liferaft should be lifted up 650 mm.	After this test the liferaft should show no signs of damage which would affect its efficient functioning.	Comments/Observations Passed: _____ Failed: _____

Inflatable liferafts	Manufacturer: _____ Model: _____ Lot/Serial Number: _____	Date: _____ Time: _____ Surveyor: _____ Organization: _____

4.1.26 Drop test		**Regulations: LSA Code; MSC.81(70) 1/5.16.3**
Test Procedure	Acceptance Criteria	Significant Test Data
The liferaft, loaded with a mass equal to the mass of the number of persons for which it is to be approved and its equipment, should be suspended from an on-load release at a height of 3 m above the water, be released and allowed to fall freely into the water. The liferaft should then be examined.	The liferaft should sustain no damage, which would affect its efficient functioning.	Comments/Observations Passed: _____ Failed: _____

Inflatable liferafts	Manufacturer: _____ Model: _____ Lot/Serial Number: _____	Date: _____ Time: _____ Surveyor: _____ Organization: _____

4.1.27 Davit-launched liferaft boarding test		**Regulations: LSA Code; MSC.81(70) 1/5.16.4**
Test Procedure	Acceptance Criteria	Significant Test Data
A davit-launched liferaft should, in addition to the boarding test prescribed in 4.1.12, be subjected to the following test. The liferaft, hanging from a launching appliance or from a crane with a head sheave of similar height and bowsed into the ship's side or simulated ship's side. The liferaft should then be boarded by the number of persons for which it is to be approved of average mass 82.5 kg. There should be no undue distortion of the liferaft. The bowsing should then be released and the liferaft left hanging for 5 min. It should then be lowered to the sea or floor and unloaded. At least three tests are required in succession, with the hook of the lowering appliance so positioned that its distance from the ship's side is: .1 half the beam of the liferaft +150 mm; .2 half the beam of the liferaft; and .3 half the beam of the liferaft -150 mm. The boarding, which is intended to simulate actual shipboard conditions, should be timed and the time recorded.	There should be no undue distortion of the liferaft. The boarding should be timed and the time recorded.	Test 1: Boarding time: Distortion: Test 2: Boarding time: Distortion: Test 3: Boarding time: Distortion: Comments/Observations Passed: _____ Failed: _____

Inflatable liferafts	Manufacturer: _____ Model: _____ Lot/Serial Number: _____	Date: _____ Time: _____ Surveyor: _____ Organization: _____

4.1.28 Davit-launched inflatable liferafts – Strength test		**Regulations: LSA Code; MSC.81(70) 1/5.17.10**
Test Procedure	Acceptance Criteria	Significant Test Data
It should be demonstrated by an overload test on the liferaft hanging from its centre support that the bridle system has an adequate factor of safety as follows: .1 the liferaft should be placed in a temperature of 20±3°C for a period of at least 6 h; .2 following this period of conditioning, the liferaft should be suspended from its lifting hook or bridle and the buoyancy chambers (not including an inflatable floor) inflated; .3 when fully inflated and when the relief valves have re-seated themselves, all relief valves should be made inoperative; .4 the liferaft should then be lowered and loaded with a distributed mass equivalent to four times the mass of the number of persons for which it is to be approved and its equipment, the mass of each person being taken as 82.5 kg; .5 the liferaft should then be raised and remain suspended for at least 5 min; .6 the pressure before and after the test after the weight is removed and while it remains suspended, should be recorded; and .7 any dimensional deflections or distortions of the liferaft should be recorded.	During the test and after its completion, the inflatable liferaft should remain suitable for its intended use.	Conditioning: temperature: _____ °C time in temperature: ____ h number of persons: _____ load: _____ kg time suspended: _____ min pressure before loading: _____ pressure suspended/loaded: _____ pressure after test after unloading: _____ dimensional deflections or distortions: Comments/Observations Passed: _____ Failed: _____

Inflatable liferafts	Manufacturer: _____ Model: _____ Lot/Serial Number: _____	Date: _____ Time: _____ Surveyor: _____ Organization: _____

4.1.29 Cold overload test		**Regulations: LSA Code; MSC/Circ.809 Annex3; MSC.81(70) 1/5.17.11**
Test Procedure	Acceptance Criteria	Significant Test Data
It should be demonstrated, after a period of 6 h in a chamber at a temperature of -30°C, that the liferaft will support a load of 1.1 times the number of persons for which it is to be approved and its equipment with all relief valves operative. The liferaft should be loaded with the test weight in the refrigerated chamber. The floor should not be inflated. The loaded inflatable liferaft should remain suspended for at least 5 min. If the inflatable liferaft must be removed from the chamber in order to suspend it, the inflatable liferaft should be suspended immediately upon removal from the chamber.	During the test and after it its completion, the inflatable liferaft should remain suitable for its intended use.	Conditioning: time in cold chamber: temperature in cold chamber: _____ °C number of persons: test weight: _____ kg (Relief valves operative/floor not inflated) time suspended: _____ min. Comments/Observations Passed: _____ Failed: _____

Inflatable liferafts	Manufacturer: _____ Model: _____ Lot/Serial Number: _____	Date: _____ Time: _____ Surveyor: _____ Organization: _____

4.1.30 Lowering abrasion test		**Regulations: LSA Code; MSC/Circ.809 Annex3; MSC.81(70) 1/5.17.12**
Test Procedure	Acceptance Criteria	Significant Test Data
The inflatable liferaft should be loaded with a weight equal to the mass of its heaviest equipment pack and the number of persons for which it is to be approved, the mass of each person being taken as 82.5 kg. Except for the floor, which should not be inflated, the inflatable liferaft should be fully inflated with all relief valves operative. A liferaft should be lowered for a distance of at least 4.5 m in continuous contact against a structure erected to represent the side of a ship having a 20° adverse list. The height of the point from which the hook is suspended should be comparable to that of a shipboard launching appliance.	During the test and after its completion, the liferaft should not sustain damage or distortion, or assume a position, which would render it unsuitable for its intended purpose.	Number of persons Load: _____ kg Height of the head sheave: _____ mm Comments/Observations Passed: _____ Failed: _____

Inflatable liferafts	Manufacturer: _____ Model: _____ Lot/Serial Number: _____	Date: _____ Time: _____ Surveyor: _____ Organization: _____

4.1.31 Self-righting test (self-righting liferafts only)	**Regulations: MSC/Circ.809 Annex3; MSC.81(70) 1/5.18**	
Test Procedure	Acceptance Criteria	Significant Test Data
A suitable means should be provided to rotate the liferaft about a longitudinal axis to any angle of heel in calm water and then release it. The liferaft should be fully inflated and fully equipped, with no one on board, with entrances and openings in the as-packed condition and, in the case of an inflatable liferaft, fully inflated. The liferaft should be incrementally rotated to angles of heel up to and including 180° and should be released.	After release the liferaft should automatically return to the upright position without assistance. Righting action should be positive and continuous, and complete righting should occur within the time difference between the liferaft reaching boardable shape, as determined by 4.1.21 at ambient temperature and at 1 minute.	The liferaft returned to upright position from the following angles of heel: + 45° ☐ - 45° ☐ + 90° ☐ - 90° ☐ + 135° ☐ - 135° ☐ + 180° ☐ Comments/Observations Righting action: Passed: _____ Failed: _____

Inflatable liferafts	Manufacturer: _____ Model: _____ Lot/Serial Number: _____	Date: _____ Time: _____ Surveyor: _____ Organization: _____

4.1.32 Submergence test (self-righting liferafts only)		**Regulations: MSC/Circ.809 Annex3; MSC.81(70) 1/5.19**
Test Procedure	Acceptance Criteria	Significant Test Data
The liferaft in its packed condition, should be submerged to a depth of at least 4 m. A rigid liferaft should be released at this depth, and, if an inflatable liferaft, initiate inflation at this depth, so as to simulate automatic float-free operation. The liferaft should float to the surface and come to its designed operational condition ready to be boarded from the sea in a sea state of at least 2 metres significant wave height in association with a wind force of Beaufort force 6.	The liferaft should float to the surface and come to its designed operational condition ready to be boarded.	Significant wave height Method of determining Significant wave height: wind force: _____ Beaufort depth submerged: _____ Comments/Observations Passed: _____ Failed: _____

4.1.33 Wind velocity test		**Regulations: MSC/Circ.809 Annex 3; MSC.81(70) 1/5.20.1 & .2**
Test Procedure	Acceptance Criteria	Significant Test Data
The Administration should from a range of liferafts require at least: one liferaft from a range of 6 to 25 persons capacity provided the material construction arrangements are similar; and each liferaft greater than 25 persons capacity, except in the case where it can be shown that the material and construction arrangements deem this unnecessary: To be tested under the conditions of wind velocity given in following paragraphs. The liferaft or liferafts in the packed condition with the entrance so arranged that it will be open on inflation, but without the container, be inflated in a wind velocity of 30 m/s and should be left in this condition for 10 minutes.	The liferaft or liferafts should show no sign of damage affecting its efficient function as a result of this test.	Passed: _____ Failed: _____ Continued/…

Inflatable liferafts	Manufacturer: _____ Model: _____ Lot/Serial Number: _____	Date: _____ Time: _____ Surveyor: _____ Organization: _____

4.1.33 Wind velocity test (continued)		**Regulations: MSC/Circ.809 Annex3; MSC.81(70) 1/5.20.3 to 5.20.5.3**
Test Procedure	Acceptance Criteria	Significant Test Data
During the above-mentioned conditions, whenever practicable, the liferaft or liferafts should be swung over approximately 30° to starboard, from that position to approximately 30° to port and return to the starting position. On completion of these first stage tests there should be no detachment of the arch support or canopy from the upper buoyancy tube or other damage which affects the efficient function of the liferaft. Then the liferaft or liferafts should be exposed to the above-mentioned wind velocity for 5 minutes in each of the following conditions: .1 with the entrance to the wind open and the other closed, if there is more than one entrance; .2 with the entrance to the wind closed and the other entrances open, if there is more than one entrance; and .3 with all entrances closed.	The liferaft or liferafts should show no sign of damage affecting its efficient function as a result of this test.	Wind velocity measured:_____m/s Time in high winds: _____ sec Comments/Observations 1 Passed: _____ Failed: _____ 2 Passed: _____ Failed: _____ 3 Passed: _____ Failed: _____

Inflatable liferafts	Manufacturer: _____ Model: _____ Lot/Serial Number: _____	Date: _____ Time: _____ Surveyor: _____ Organization: _____

4.1.34 Self draining test (self-righting liferafts only)		**Regulations: MSC.81(70) 1/5.21**
Test Procedure	Acceptance Criteria	Significant Test Data
Water should be pumped into the interior of the liferaft, while it is afloat, at a rate of 2300 l per minute for 1 min. If a liferaft is divided into separate areas, by thwarts or other means, each such area should be subjected to the test.	After the water has been shut off and has drained, there should be no appreciable accumulation of water in the liferaft.	Hose delivery rate: l/min Period of delivery of water:__min Area of liferaft: _____ m^2 Area of drainage point: _____m^2 Draining area sufficient to remove water: YES/NO: _____ Comments/Observations Passed: _____ Failed: _____

Inflatable liferafts	Manufacturer: _____ Model: _____ Lot/Serial Number: _____	Date: _____ Time: _____ Surveyor: _____ Organization: _____

4.1.35 Seam strength test	**Regulations: LSA Code IV/4.2; MSC.81(70) 1/5.17.9.1 & 5.17.9.2**	
Test Procedure	Acceptance Criteria	Significant Test Data
Seam Strength Test 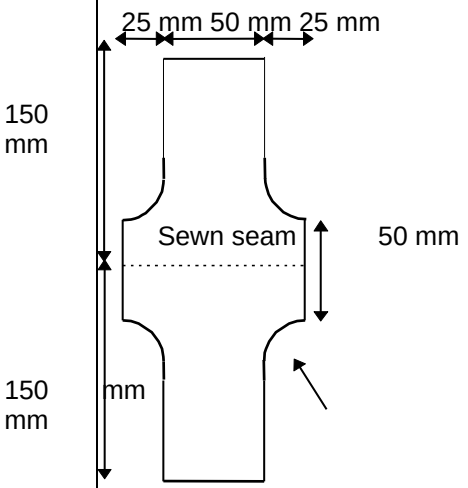 Fig.1 Sample specification for sewn canopy	.1 It should be demonstrated that sample seams, prepared in the same condition as in production, can withstand a test load equal to the minimum specified liferaft fabric tensile strength. Sewn seams on outer canopy fabric should withstand a test load of at least 70% of the minimum specified fabric tensile strength when tested by the method described in ISO 1421:1998 and by using test samples as shown in fig.1 below. .2 Weld strength 1.1 When tested by the method prescribed below, the load required to initiate failure of the weld should be not less than 175 N; 2.2 Specimens should be prepared and tested as given in .3.3 below:	Fabric minimum specified liferaft tensile: strength _____ N/50 mm. Seam strength _____ N/50 mm. Outer canopy minimum specified tensile: strength _____ N/50 mm. Seam strength _____ N/50 mm. Weld strength _____ N Comments/Observations Passed: _____ Failed: _____
.1 Samples of all types of sewing used in production to be tested. .2 Seam constructions in both warp and weft direction should be tested. .3 The test specimens should be cut out from pre-sewn samples of fabric-and no locking of thread ends take place.		

Inflatable liferafts	Manufacturer: _____ Model: _____ Lot/Serial Number: _____	Date: _____ Time: _____ Surveyor: _____ Organization: _____

4.1.35 Seam strength test (continued)	**Regulations: LSA Code IV/4.2; MSC.81(70) 1/5.17.9.3**	
Test Procedure	Acceptance Criteria	Significant Test Data
	.3 Hydrolysis tests should be conducted on sample welded seams where thermoplastic-coated materials are to be used. The tests should be conducted as follows: 3.1 When tested by the method prescribed below, the weld strength of the sample seam should achieve 125 N/25 mm minimum. 3.2 Test method: .1 Store the test specimens for 12 weeks over water in a closed container at 93°C ± 2°C. .2 After the conditioning as above, dry the specimens for 1 h at 80 ± 2°C and condition at 20 ± 2°C, 65% RH for 24 h. 3.3 Welded test samples should be prepared as follows: Two samples of fabric 300 mm x 200 mm, cut with the short side parallel to the warp direction, should be superimposed face to back for double coated fabrics, or coated face to coated face for single or asymmetrically coated fabrics. They should be welded with a tool 10± 1 mm width of convenient length. 25 mm wide test specimens should be cut transversely to the line of the weld. The test samples should be mounted in a test machine as in ISO 1421:1998. The maximum peel load should be recorded.	Weld strength:_____N Comments/Observations Passed: _____ Failed: _____

4.2 RIGID LIFERAFTS

EVALUATION AND TEST REPORT

4.2.1 Submitted drawings, reports and documents
4.2.1.1 General data and specifications

4.2.2 Quality assurance

4.2.3 Visual inspection

4.2.4 Drop test

4.2.5 Jump test

4.2.6 Weight test

4.2.7 Towing test

4.2.8 Mooring out tests

4.2.9 Liferaft painter system test

4.2.10 Loading and seating test

4.2.11 Boarding test

4.2.12 Closing arrangement test

4.2.13 Stability test

4.2.14 Manoeuvrability test

4.2.15 Swamp test

4.2.16 Canopy closure test

4.2.17 Detailed inspection

4.2.18 Weak link strength test

4.2.19 Lifting components strength test

4.2.20 Impact test

4.2.21 Drop test

4.2.22 Davit-launched liferaft boarding test

4.2.23 Self-righting test (self-righting liferafts only)

4.2.24 Submergence test (self-righting liferafts only)

4.2.25 Wind velocity test

4.2.26 Self-draining test (self-righting liferafts only)

4.2.27 Inherently buoyant material

4.2 RIGID LIFERAFTS

EVALUATION AND TEST REPORT

Manufacturer	
Type	
Date	
Place	
Name Surveyor printed	
Signature	
Approving Organization	

Rigid liferafts	Manufacturer: _____ Model: _____ Lot/Serial Number: _____	Date: _____ Time: _____ Surveyor: _____ Organization: _____

4.2.1 Submitted drawings, reports and documents

Submitted drawings and documents			**Status**
Drawing No.	**Revision No. & date**	**Title of drawing**	

Submitted reports and documents			**Status**
Report/Document No.	**Revision No. & date**	**Title of report/document**	
		Maintenance Manual -	
		Operations Manual -	

Rigid liferafts	Manufacturer: _____ Model: _____ Lot/Serial Number: _____	Date: _____ Time: _____ Surveyor: _____ Organization: _____

4.2.1.1 General data and specifications	**Regulations: -**
Cylinder:	
Release head:	
Fabric:	

Rigid liferafts	Manufacturer: _____ Model: _____ Lot/Serial Number: _____	Date: _____ Time: _____ Surveyor: _____ Organization: _____

4.2.2 Quality assurance	**Regulations: MSC.81(70) 2/1.1, 1.2**
Except where all appliances of a particular type are required by chapter III of the International Convention for the Safety of Life at Sea, 1974, as amended or the International Life-Saving Appliance (LSA) Code, to be inspected, representatives of the Administration should make random inspections of manufacturers to ensure that the quality of life-saving appliances and materials used comply with the specification of the approved prototype life-saving appliance. Manufacturers should be required to institute a quality control procedure to ensure that life-saving appliances are produced to the same standard as the prototype life-saving appliance approved by the Administration and to keep records of any production tests carried out in accordance with the Administration's instructions.	Quality assurance Standard Used: _____ Quality assurance Procedure: _____ Quality assurance Manual: _____ Description of System: _____ Quality assurance System acceptable Yes/No Comments/Observations

Rigid liferafts	Manufacturer: _____ Model: _____ Lot/Serial Number: _____	Date: _____ Time: _____ Surveyor: _____ Organization: _____

4.2.3 Visual inspection		**Regulations: LSA Code I/1.2, IV/4.3; MSC.81(70)**
Test Procedure	Acceptance Criteria	Significant Test Data
The liferaft should be subjected to a thorough visual inspection. The following items should be confirmed during the inspection: - proper workmanship - suitable materials - rot proof, corrosion resistant - not affected by seawater, oil or fungal attack - resistant to sunlight - highly visible colour - retro-reflective tape to be as per resolution A.658(16) safely used in a seaway	Be of an international or vivid reddish orange, or at a comparably highly visible colour on all parts where this will assist detection at sea	Passed _____ Failed _____ Passed _____ Failed _____ Passed _____ Failed _____ Passed _____ Failed _____ Passed _____ Failed _____ Passed _____ Failed _____ Passed _____ Failed _____ Passed _____ Failed _____ Comments/Observations

Rigid liferafts	Manufacturer: _____ Model: _____ Lot/Serial Number: _____	Date: _____ Time: _____ Surveyor: _____ Organization: _____

4.2.4 Drop test		**Regulations: LSA Code IV/4.1.1.2; MSC.81(70) 1/5.1**
Test Procedure	Acceptance Criteria	Significant Test Data
(Overload test) Each type of liferaft should be subjected to a minimum of two drop tests. Where the liferaft in its operational condition is packed in a container or valise, one such test should be carried out with the liferaft packed in each type of container or valise in which the manufacturer proposes to mark it. The liferaft, in the operational packed condition, should be suspended and then dropped from a height of 18 m into the water. If it is to be stowed at a height greater than 18 m, it should be dropped from the height at which it is to be stowed. The free end of the painter should be attached to the point of suspension so that it pays out as the liferaft drops, thus simulating actual conditions. The liferaft should be left floating for 30 min. The liferaft should be lifted from the water to permit thorough inspection of the liferaft, the contents of the equipment container and, where applicable, the container or valise.	Damage to the container or valise, if the liferaft is normally within it when launched, is acceptable provided the Administration is satisfied that it would not be a hazard to the liferaft. Damage to any item of equipment is acceptable subject to the Administration being satisfied that the operational efficiency has not been impaired. Damage to freshwater receptacles may be accepted provided they do not leak. However, for drop tests from heights exceeding 18 m, leakage from up to 5% of the receptacles may be accepted provided that: .1 the equipment list for the liferaft specifies the carriage of 5% excess water or means of desalination adequate to produce an equivalent amount; or .2 the water receptacles are contained in a waterproof overwrap. *If any additional equipment was placed in the liferaft for this test, e.g. SART, state type and condition of the equipment after the test.	Container details: Type of emergency pack Height of drop _____m Painter length _____m Floating position: Condition: Container Liferaft *Equipment Comments/Observations Passed: _____ Failed: _____

Rigid liferafts	Manufacturer: _____ Model: _____ Lot/Serial Number: _____	Date: _____ Time: _____ Surveyor: _____ Organization: _____

4.2.5 Jump test		**Regulations: LSA Code IV/4.1.1.3; MSC.81(70) 1/5.2**
Test Procedure	Acceptance Criteria	Significant Test Data
It should be demonstrated that a person can jump on to the liferaft, with and without the canopy erected, from a height above the floor of at least 4.5 m without damaging the liferaft. The test subject should weigh not less than 82.5 kg and should be wearing hard bottom shoes with smooth soles and no protruding nails. The number of jumps performed should be equal to the total number of persons for which the liferaft is to be approved. The jump test may be simulated by dropping a suitable and equivalent mass, arranged so as to impact the liferaft with shoes as described in the above paragraph.	There should be no torn fabric, or damage to seams as a result of the test.	Number of jumps: _____ Height of jump: _____ m Comments/Observations Passed: _____ Failed: _____

4.2.6 Weight test		**Regulations: LSA Code IV/4.1.2.2; MSC.81(70) 1/5.3**
Test Procedure	Acceptance Criteria	Significant Test Data
The fully packed liferaft container should be weighed to determine whether its mass exceeds 185 kg. The weight test should be performed on the heaviest variation of the liferaft, considering different containers and equipment packs, which may be used. If the mass exceeds 185 kg, the different combinations of containers and equipment packs should be weighed to determine which will and which will not exceed 185 kg.		Emergency pack type: _____ Measured liferaft weight___kg Comments/Observations Passed: _____ Failed: _____

Rigid liferafts	Manufacturer: _____ Model: _____ Lot/Serial Number: _____	Date: _____ Time: _____ Surveyor: _____ Organization: _____

4.2.7 Towing test		**Regulations: LSA Code IV/4.1.1.4; MSC.81(70) 1/5.4**
Test Procedure	Acceptance Criteria	Significant Test Data
It should be demonstrated by towing that the fully loaded and equipped liferaft is capable of being satisfactorily towed at speeds of up to 3 knots in calm water. Towing should be by a line attached to the liferaft's towing connection. The sea anchor should be streamed while the liferaft is towed. The liferaft should be towed for a distance of at least 1 km. Record the towing strain of 2 knots and at 3 knots and record also on the Type Approval certificate.	It should be shown that the liferaft can be satisfactorily towed at a speed of up to 3 knots with the anchor streamed without significant damage.	Speed during test _____knots Raft towing connections: Distance covered: Total Load in raft: Towing strain at 2 knots _____ kN Towing strain at 3 knots _____ kN Comments/Observations Passed _____ Failed _____

Rigid liferafts	Manufacturer: _____ Model: _____ Lot/Serial Number: _____	Date: _____ Time: _____ Surveyor: _____ Organization: _____

4.2.8 Mooring out tests		**Regulations: LSA Code IV/4.1.1.1; MSC.81(70) 1/5.5**
Test Procedure	Acceptance Criteria	Significant Test Data
The liferaft should be loaded with mass equal to the mass of the total number of persons for which it is to be approved and its equipment and moored in a location at sea or in a seawater harbour. The liferaft should remain afloat in that location for 30 days. The liferaft should not sustain any damage that would impair its performance.	The liferaft should not sustain any damage that would impair its performance.	Location _____ Mooring out period days Condition of liferaft: Comments/Observations Passed: _____ Failed: _____

4.2.9 Liferaft painter system test		**Regulations: LSA Code IV/4.1.6.1, 4.1.3.2/; MSC.81(70) 1/5.6**
Test Procedure	Acceptance Criteria	Significant Test Data
The painter system including attachments should be tensile tested.	Liferaft painter system and attachments should have a breaking strain as follows: 7.5 kN for liferafts to carry up to 8 persons 10.0 kN for liferafts to carry 9 to 25 persons 15.0 kN for liferafts to carry 26 persons or more	Number of persons: Breaking strain of painter system: Comments/Observations Passed: _____ Failed: _____

Rigid liferafts	Manufacturer: _____ Model: _____ Lot/Serial Number: _____	Date: _____ Time: _____ Surveyor: _____ Organization: _____

4.2.10 Loading and seating test		**Regulations: LSA Code IV/4.3.3; MSC.81(70) 1/5.7**
Test Procedure	Acceptance Criteria	Significant Test Data
The freeboard of the liferaft in the light condition, including its full equipment but no personnel, should be recorded. The freeboard of the liferaft should again be recorded when the number of persons for which the liferaft is to be approved, having an average mass of 82.5 kg, and each wearing immersion suit and a lifejacket, have boarded and are seated. It should be established that all the seated persons have sufficient space and headroom and it should be demonstrated that the various items of equipment can be used within the liferaft in this condition.	All the seated persons should have sufficient space and headroom and the various items of equipment can be used within the liferaft in this condition. The freeboard, when loaded with the mass of the number of persons for which it is to be approved and its equipment, with the liferaft on an even keel, should not be less than 300 mm.	Lifejackets used? YES_____ NO_____ Immersion suits used? YES_____ NO_____ Freeboards: Light 12 o'clock _____ mm 3 o'clock _____ mm 6 o'clock _____ mm 9 o'clock _____ mm Loaded 12 o'clock _____ mm 3 o'clock _____ mm 6 o'clock _____ mm 9 o'clock _____ mm Number of persons seated _____ Equipment accessible/usable? YES_____ NO_____ Comments/Observations

Rigid liferafts	Manufacturer: _____ Model: _____ Lot/Serial Number: _____	Date: _____ Time: _____ Surveyor: _____ Organization: _____

4.2.11 Boarding test		**Regulations: LSA Code IV/4.3.4; MSC.81(70) 1/5.8**
Test Procedure	Acceptance Criteria	Significant Test Data
The boarding test should be carried out in a swimming pool by a team of not more than four persons who should be of mature age and of differing physiques as determined by the Administration. Preferably they should not be strong swimmers. For this test they should be clothed in shirt and trousers or a boiler suit and should wear approved lifejackets suitable for an adult. They must each swim about 100 m before reaching the liferaft for boarding. There must be no rest period between the swim and the boarding attempt. Boarding should be attempted by each person individually with no assistance from other swimmers or persons already in the liferaft. The water should be of a depth sufficient to prevent any external assistance when boarding the liferaft.	The arrangements will be considered satisfactory if three of the persons board the liferaft unaided and the fourth boards with the assistance of any of the others.	Record particulars of persons: Age Height Weight P1 _____Y _____m_____kg P2 _____Y _____m_____kg P3 _____Y _____m_____kg P4 _____Y _____m_____kg Boarded unaided__persons Boarded aided _____persons Comments/Observations Passed: _____ Failed: _____

Rigid liferafts	Manufacturer: _____ Model: _____ Lot/Serial Number: _____	Date: _____ Time: _____ Surveyor: _____ Organization: _____

4.2.12 Closing arrangement test		**Regulations: LSA Code IV/4.1.1.5.3; MSC.81(70) 1/5.8**
Test Procedure	Acceptance Criteria	Significant Test Data
The boarding test should be repeated with persons clothed in immersion suits and lifejackets. After the boarding test a person clothed in approved immersion suit should demonstrate that the entrance can be easily and quickly closed in 1 minute and can be easily and quickly opened from inside and outside in 1 minute.	3 out of 4 persons wearing immersion suit and lifejackets must board the liferaft unaided. The entrance should be easily closed in less than 1 min. by a person wearing an approved immersion suit. The entrance should be easily opened from inside in less than 1 min. by a person wearing an approved immersion suit. The entrance should be easily opened from outside in less than 1 min. by a person wearing an approved immersion suit.	Record particulars of persons: Age Height Weight P1 _____Y _____m_____kg P2 _____Y _____m_____kg P3 _____Y _____m_____kg P4 _____Y _____m_____kg Boarded unaided _____persons Boarded aided _____Persons Closing time _____sec Open time inside___sec Open time outside___sec Comments/Observations Passed: _____ Failed: _____

Rigid liferafts	Manufacturer: _____ Model: _____ Lot/Serial Number: _____	Date: _____ Time: _____ Surveyor: _____ Organization: _____

4.2.13 Stability test		**Regulations: LSA Code IV/4.3.5; MSC.81(70) 1/5.9**
Test Procedure	Acceptance Criteria	Significant Test Data
.1 The number of persons for which the liferaft is to be approved should be accommodated on one side and then at one end and in each case the freeboard should be recorded. Under these conditions the freeboard should be such that there is no danger of the liferaft being swamped. .2 The stability of the liferaft during boarding may be ascertained as follows: Two persons each wearing approved lifejackets should board the empty liferaft. It should then be demonstrated that the two persons in the liferaft can readily assist from the water a third person who is required to feign unconsciousness. The third person must have his back towards the entrance so that he cannot assist the rescuers.	Each freeboard measurement should be taken from the waterline to the top surface at its lowest point. It should be demonstrated that the water pockets adequately counteract the upsetting moment on the liferaft and there is no danger of the liferaft capsizing.	Freeboards with all persons on one side: 12 o'clock_____mm 3 o'clock_____mm 6 o'clock_____mm 9 o'clock_____mm Observations when boarding: persons: _____ unconscious person: _____ Effect of water pockets: Comments/Observations Passed: _____ Failed: _____

Rigid liferafts	Manufacturer: _____ Model: _____ Lot/Serial Number: _____	Date: _____ Time: _____ Surveyor: _____ Organization: _____

4.2.14 Manoeuvrability test		**Regulations: LSA Code IV/4.1.5.1.6; MSC.81(70) 1/5.10**
Test Procedure	Acceptance Criteria	Significant Test Data
It should be demonstrated that with the paddles provided, the liferaft is capable of being propelled when fully laden in calm conditions over a distance of at least 25 m.	The liferaft should be capable of being propelled when fully laden in calm conditions over a distance of at least 25 m within a reasonable timescale.	Distance manoeuvred:_____m Approx. speed: _____knots Comments/Observations Passed: _____ Failed: _____

4.2.15 Swamp test		**Regulations: LSA Code; MSC.81(70) 1/5.11**
Test Procedure	Acceptance Criteria	Significant Test Data
It should be demonstrated that the liferaft, when fully swamped, is capable of supporting its full equipment and the number of persons for which it is to be approved. The liferaft should not seriously deform in this condition.	The liferaft when fully swamped, should be capable of supporting its full equipment and the number of persons for which it is to be approved. The liferaft should not seriously deform in this condition. During this test self-draining arrangements fitted in the floor of the liferaft are to be closed to prevent the ingress of water	Loaded liferaft swamped Freeboards: 12 o'clock _____ mm 3 o'clock _____ mm 6 o'clock _____ mm 9 o'clock _____ mm Maximum depth of water measured inside the liferaft: _____ mm Deformation _____ If self-bailing, time to self-bail: _____ min Comments/Observations Passed _____ Failed _____

Rigid liferafts	Manufacturer: _____ Model: _____ Lot/Serial Number: _____	Date: _____ Time: _____ Surveyor: _____ Organization: _____

4.2.16 Canopy closure test		**Regulations: LSA Code IV/4.1.1.5; MSC.81(70) 1/5.12**
Test Procedure	Acceptance Criteria	Significant Test Data
To ensure the effectiveness of the canopy closures in preventing water entering the liferaft, the efficiency of the closed entrances should be demonstrated by means of a hose test or by any other equally effective method. The requirement for the hose test is that about 2,300 l of water per minute be directed at and around the entrances through a 63.5 mm hose from a point 3.5 m away and 1.5 m above the level of the buoyancy tubes for a period of 5 min.	The accumulation of water inside the liferaft should not exceed 4 l.	Capacity of water hose_____l/min Condition of canopy during test _____ _____ _____ Liters of water accumulated _____ _____ _____ Comments/Observations Passed: _____ Failed: _____

Rigid liferafts	Manufacturer: _____ Model: _____ Lot/Serial Number: _____	Date: _____ Time: _____ Surveyor: _____ Organization: _____

4.2.17 Detailed inspection		**Regulations: LSA Code; MSC.81(70) 1/5.14**
Test Procedure	Acceptance Criteria	Significant Test Data
The liferaft should be subjected to a detailed inspection to verify that it complies with to requirements of the LSA-code.	The liferaft should comply with the requirements of the LSA Code in all respects including: • interior not to cause discomfort to occupants • at least one viewing port • means for collection rainwater • sufficient headroom • 8 persons- at least two entrances • equipment to be stowed inside liferaft, but capable of floating at least 30 minutes in water without damage to content • at least one boarding ramp • means to assist a person to pull themselves into the liferaft • container markings • marking on raft	.1 Interior not to cause discomfort to occupants: ____ .2 At least one viewing port: ____ .3 Means for collection rainwater: ____ .4 Sufficient headroom: ____ .5 8 persons at least two entrances: ____ .6 Equipment to be stowed inside liferaft, but capable of floating at least 30 minutes in water without damage to content: ____ .7 At least one boarding ramp: ____ .8 Means to assist a person to pull themselves into the liferaft: ____ .9 Container markings: ____ .10 Marking on raft: ____ Comments/Observations Passed: _____ Failed: _____

Rigid liferafts	Manufacturer: _____ Model: _____ Lot/Serial Number: _____	Date: _____ Time: _____ Surveyor: _____ Organization: _____

4.2.18 Weak link strength test		**Regulations: LSA Code IV/4.1.6.2; MSC.81(70) 1/5.15**
Test Procedure	Acceptance Criteria	Significant Test Data
The weak link should be tensile tested.	A weak link in the painter system should have a breaking strain of 2.2 ±0.4 kN It should be expected that the force required to pull the painter from the liferaft container will not break the weak link. (Refer to HRU test form 4.3.1.11) if applicable, be of sufficient strength to permit the inflation of the liferaft,	Measured breaking strain of weak link: kN Comments/Observations Passed: _____ Failed: _____

4.2.19 Lifting components strength test		**Regulations: LSA Code IV/4.3.7 ; MSC.81(70) 1/5.16.1**
Test Procedure	Acceptance Criteria	Significant Test Data
The breaking strength of the webbing or rope and the attachments to the liferaft used for the lifting bridle should be established by tests on three separate pieces of each different item.	The combined strength of the lifting bridle components should be at least six times the mass of the liferaft when loaded with the number of persons for which it is to be approved and its equipment.	Combined strength of lifting bridle components: Mass of liferaft when loaded with the number of persons for which it is to be approved: _____ kg Calculated safety factor: _____ Comments/Observations Passed: _____ Failed: _____

Rigid liferafts	Manufacturer: _____ Model: _____ Lot/Serial Number: _____	Date: _____ Time: _____ Surveyor: _____ Organization: _____

4.2.20 Impact test		**Regulations: LSA Code; MSC.81(70) 1/5.16.2**
Test Procedure	Acceptance Criteria	Significant Test Data
The liferaft should be loaded with a mass equal to the mass of the number of persons for which it is to be approved and its equipment. With the liferaft in a free hanging position it should be pulled laterally to a position so that when released it will strike a rigid vertical surface at a velocity of 3.5 m/s. The liferaft should then be released to impact against the rigid vertical surface. Note: The liferaft should be lifted up 650 mm.	After this test the liferaft should show no signs of damage which would affect its efficient functioning.	Comments/Observations Passed: _____ Failed: _____

4.2.21 Drop test		**Regulations: LSA Code; MSC.81(70) 1/5.16.3**
Test Procedure	Acceptance Criteria	Significant Test Data
The liferaft, loaded as prescribed in 4.2.20, should be suspended from an on-load release at a height of 3 m above the water, be released and allowed to fall freely into the water. The liferaft should then be examined.	The liferaft should sustain no damage, which would affect its efficient functioning.	Comments/Observations Passed: _____ Failed: _____

Rigid liferafts	Manufacturer: _____ Model: _____ Lot/Serial Number: _____	Date: _____ Time: _____ Surveyor: _____ Organization: _____

4.2.22 Davit-launched liferaft boarding test		**Regulations: LSA Code; MSC.81(70) 1/5.16.4**
Test Procedure	Acceptance Criteria	Significant Test Data
A davit-launched liferaft should, in addition to the boarding test prescribed in 4.2.11, be subjected to the following test. The liferaft, hanging from a launching appliance, or from a crane with a head sheave of similar height and bowsed into the ship's side or simulated ship's side, the liferaft should be boarded by the number of persons for which it is to be approved of average mass 82.5 kg. There should be no undue distortion of the liferaft. The bowsing should then be released and the liferaft left hanging for 5 min. It should then be lowered to the sea or floor and unloaded. At least three tests are required in succession, with the hook of the lowering appliance so positioned that its distance from the ship's side is: .1 half the beam of the liferaft +150 mm; .2 half the beam of the liferaft; and .3 half the beam of the liferaft -150 mm. The boarding, which is intended to simulate actual shipboard conditions, should be timed and the time recorded.	There should be no undue distortion of the liferaft. The boarding should be timed and the time recorded.	Boarding time 1: Distortion test 1: Boarding time2: Distortion test 2: Boarding time 3: Distortion test 3: Comments/Observations Passed: _____ Failed: _____

Rigid liferafts	Manufacturer: _____ Model: _____ Lot/Serial Number: _____	Date: _____ Time: _____ Surveyor: _____ Organization: _____

4.2.23 Self-righting test (self-righting liferafts only)	**Regulations: LSA Code 4.3.5.1; MSC.81(70) 1/5.18**				
Test Procedure	Acceptance Criteria	Significant Test Data			
A suitable means should be provided to rotate the liferaft about a longitudinal axis to any angle of heel in calm water and then release it. The liferaft should be fully equipped, with no one on board, with entrances and openings in the as-packed condition. The liferaft should be incrementally rotated to angles of hull up to and including 180° and should be released.	After release the liferaft should automatically return to the upright position without assistance. Righting action should be positive and continuous.	The liferaft returned to upright position from the following angles of heel:			
		+ 10°		- 10°	
		+ 20°		- 20°	
		+ 30°		- 30°	
		+ 40°		- 40°	
		+ 50°		- 50°	
		+ 60°		- 60°	
		+ 70°		- 70°	
		+ 80°		- 80°	
		+ 90°		- 90°	
		+ 100°		- 100°	
		+ 110°		- 110°	
		+ 120°		- 120°	
		+ 130°		- 130°	
		+ 140°		- 140°	
		+ 150°		- 150°	
		+ 160°		- 160°	
		+ 170°		- 170°	
		+ 180°		- 180°	
		Comments/Observations Passed: _____ Failed: _____			

Rigid liferafts	Manufacturer: _____ Model: _____ Lot/Serial Number: _____	Date: _____ Time: _____ Surveyor: _____ Organization: _____

4.2.24 Submergence test (self-righting liferafts only)		**Regulations: MSC/Circ.809 Annex3; MSC.81(70) 1/5.19**
Test Procedure	Acceptance Criteria	Significant Test Data
The liferaft should be submerged to a depth of at least 4 m. A rigid liferaft should be released at this depth, and, if an inflatable liferaft, initiate inflation at this depth, so as to simulate automatic float-free operation. The liferaft should float to the surface and come to its designed operational condition ready to be boarded from the sea in a sea state of at least 2 metres significant wave height in association with a wind force of Beaufort force 6.	The liferaft should float to the surface and come to its designed operational condition ready to be boarded.	Significant wave height: _____ Method of determining Significant wave height: wind force: _____ Beaufort depth submerged: _____ m Comments/Observations Passed: _____ Failed: _____

Rigid liferafts	Manufacturer: _____ Model: _____ Lot/Serial Number: _____	Date: _____ Time: _____ Surveyor: _____ Organization: _____

4.2.25 Wind velocity test		**Regulations: LSA Code; MSC.81(70) 1/5.20**
Test Procedure	Acceptance Criteria	Significant Test Data
The Administration should from a range of liferafts require at least: one liferaft from a range of 6 to 25 persons capacity provided the material construction arrangements are similar; and each liferaft greater than 25 persons capacity, except in the case where it can be shown that the material and construction arrangements deem this unnecessary: to be tested under the conditions of wind velocity given in the following paragraphs. The liferaft or liferafts in the packed condition with the entrance so arranged that it will be open, but without the container, in a wind velocity of 30 m/s and should be left in this condition for 10 minutes. During the above-mentioned conditions, whenever practicable, the liferaft or liferafts should be swung over approximately 30° to starboard, from that position to approximately 30° to port and return to the starting position.	The liferaft or liferafts should show no sign of damage affecting its efficient function as a result of this test. On completion of these first stage tests there should be no detachment of the arch support or canopy from the upper buoyancy tube or other damage which affects the efficient function of the liferaft.	Comments/Observations Passed: _____ Failed: _____ Passed: _____ Failed: _____ Passed: _____ Failed: _____ Continued/…

Rigid liferafts	Manufacturer: _____ Model: _____ Lot/Serial Number: _____	Date: _____ Time: _____ Surveyor: _____ Organization: _____

4.2.25 Wind velocity test (continued)		**Regulations: LSA Code; MSC.81(70) 1/5.20**
Test Procedure	Acceptance Criteria	Significant Test Data
Then the liferaft or liferafts should be exposed to the above-mentioned wind velocity for 5 minutes in each of the following conditions: .1 with the entrance to the wind open and the other closed, if there is more than one entrance; .2 with the entrance to the wind closed and the other entrances open, if there is more than one entrance; and .3 with all entrances closed.	The liferaft or liferafts should show no sign of damage affecting its efficient function because of this test.	Wind velocity measured: _____ m/s Time in high winds: _____ sec Comments/Observations Passed: _____ Failed: _____

Rigid liferafts	Manufacturer: _____ Model: _____ Lot/Serial Number: _____	Date: _____ Time: _____ Surveyor: _____ Organization: _____

4.2.26 Self draining test (self-righting liferafts only)	**Regulations: MSC.81(70) 1/5.21**	
Test Procedure	Acceptance Criteria	Significant Test Data
Water should be pumped into the interior of the liferaft, while it is afloat, at a rate of 2300 l per minute for 1 min. If a liferaft is divided into separate areas, by thwarts or other means, each such area should be subjected to the test.	After the water has been shut off and has drained, there should be no appreciable accumulation of water in the liferaft.	Hose delivery rate: _____ l/min Period of delivery of water: _____ min Area of liferaft: _____ m^2 Area of drainage point: _____ m^2 Draining area sufficient to remove water: YES/NO: _____ Comments/Observations Passed: _____ Failed: _____

4.2.27 Inherently Buoyant Material	**Regulations: LSA Code 4.3.2.1; MSC.81(70) 1/6.2.2**	
Test Procedure	Acceptance Criteria	Significant Test Data
The buoyancy of the rigid liferaft should be by inherently buoyant material tested according to the tests in form 4.3.3 except the tensile strength test.		Comments/Observations Passed: _____ Failed: _____

4.3 COMPONENTS FOR SURVIVAL CRAFT

4.3.3 LIFEBOAT BUOYANT MATERIAL

4.3.1 HYDROSTATIC RELEASE UNITS

EVALUATION AND TEST REPORT

4.3.1.1 Submitted drawings, reports and documents

4.3.1.2 Quality assurance

4.3.1.3 Visual and dimensional examination

4.3.1.4 Corrosion resistance test

4.3.1.5 Temperature tests

4.3.1.6 Submergence and manual release test

4.3.1.7 Strength test

4.3.1.8 Technical tests on the membrane – 1

4.3.1.9 Technical tests on the membrane – 2

4.3.1.10 Solar radiation test

4.3.1.11 Performance test

4.3.1.12 Weak link test

4.3.1 HYDROSTATIC RELEASE UNITS

EVALUATION AND TEST REPORT

Manufacturer	
Type (serviceable/disposable)	
Date	
Place	
Name Surveyor printed	
Signature	
Approving Organization	

Hydrostatic release units	Manufacturer: _____ Model: _____ Lot/Serial Number: _____	Date: _____ Time: _____ Surveyor: _____ Organization: _____

4.3.1.1 Submitted drawings, reports and documents

Submitted drawings and documents			**Status**
Drawing No.	**Revision No. & date**	**Title of drawing**	

Submitted reports and documents			**Status**
Report/Document No.	**Revision No. & date**	**Title of report/document**	
		Maintenance Manual -	
		Operations Manual -	

Hydrostatic release units	Manufacturer: _____ Model: _____ Lot/Serial Number: _____	Date: _____ Time: _____ Surveyor: _____ Organization: _____

4.3.1.2 Quality assurance	**Regulations:** MSC.81(70) 2/1.1, 1.2
Except where all appliances of a particular type are required by chapter III of the International Convention for the Safety of Life at Sea, 1974.3, as amended or the International Life-Saving Appliance (LSA) Code, to be inspected, representatives of the Administration should make random inspections of manufacturers to ensure that the quality of life-saving appliances and materials used comply with the specification of the approved prototype life-saving appliance. Manufacturers should be required to institute a quality control procedure to ensure that life-saving appliances are produced to the same standard as the prototype life-saving appliance approved by the Administration and to keep records of any production tests carried out in accordance with the Administration's instructions.	Quality assurance Standard Used: Quality assurance Procedure: Quality assurance Manual: Description of System: Quality assurance System acceptable Yes/No Comments/Observations:

Hydrostatic release units	Manufacturer: _____ Model: _____ Lot/Serial Number: _____	Date: _____ Time: _____ Surveyor: _____ Organization: _____

4.3.1.3 Visual and dimensional examination	**Regulations: LSA Code IV/4.1.6.3; MSC.81(70) 1/11.1**	
Test Procedure	Acceptance Criteria	Significant Test Data
Two samples of hydrostatic release units should be given a visual and dimensional examination. If the devices conform to the manufacturer's drawings and specifications, they should be accepted and assembled for further testing under the technical and performance tests as prescribed below. The examination should include proper markings, clear instructions (indelible), expiry date and confirmation that the materials are: .1 compatible; and .2 not galvanized or otherwise metallic coated. The lifespan should be determined.	The units should be examined and must conform to the manufacturer's drawings and specifications. Each hydrostatic release unit should undergo all the following technical tests shown in forms 4.3.1.4 to 4.3.1.10. No parts should be renewed or repaired between the tests. The tests should be conducted in the sequence of the forms.	Comments/Observations Lifespan: _____ Passed: _____ Failed: _____

Hydrostatic release units	Manufacturer: _____ Model: _____ Lot/Serial Number: _____	Date: _____ Time: _____ Surveyor: _____ Organization: _____

4.3.1.4 Corrosion resistance test	**Regulations: LSA Code IV/4.1.6.3; MSC.81(70) 1/11.2.1**	
Test Procedure	Acceptance Criteria	Significant Test Data
A hydrostatic release unit should be exposed to a salt water spray test (5% natrium chloride solution) at a temperature of 35±3°C for 160 h without interruption. (not stated)	After completion of the test the hydrostatic release unit should show no corrosion which could affect its efficient functioning. The Hydrostatic Release Unit should be next subjected to the Temperature test of 4.3.1.5.	Salt water solution: _____ Time exposed to spray: _____ hrs Comments/Observations Passed: _____ Failed: _____

Hydrostatic release units	Manufacturer: _____ Model: _____ Lot/Serial Number: _____	Date: _____ Time: _____ Surveyor: _____ Organization: _____

4.3.1.5 Temperature tests	**Regulations: LSA Code I/1.2.2.2; MSC.81(70) 1/11.2.2**	
Test Procedure	Acceptance Criteria	Significant Test Data
The hydrostatic release units should then be subjected to the temperature-cycling test. The units should be alternately subjected to surrounding temperatures of -30°C and +65°C. These alternating cycles need not follow immediately after each other and the following procedure, repeated for a total of 10 cycles, is acceptable: .1 an 8 h exposure at a minimum temperature of + 65°C to be completed in one day; .2 the specimens removed from the warm chamber that same day and left exposed under ordinary room conditions at a temperature of 20°C ±3°C until the next day; .3 an 8 h exposure at a maximum temperature of -30°C to be completed the next day; and .4 the specimens removed from the cold chamber that same day and left exposed under ordinary room conditions at a temperature of 20°C ±3°C until the next day.	The hydrostatic release unit should not be damaged in stowage throughout the air temperature range -30°C to +65°C. There should be no sign of loss of rigidity under high temperatures and after the tests, the unit should show no sign of damage such as shrinking cracking swelling dissolution or change of mechanical qualities, and it should operate as before the test. Following temperature cycling: One HRU should be taken from a stowage temperature of -30°C and should then operate in seawater at a temperature of -11°C. The other HRU should be taken from a stowage temperature of +65°C and should then operate at a temperature of +30°C. The hydrostatic release unit should then next be subjected to the Submergence and manual release test of 4.3.1.6.	Comments/Observations Passed: _____ Failed: _____

Hydrostatic release units	Manufacturer: _____ Model: _____ Lot/Serial Number: _____	Date: _____ Time: _____ Surveyor: _____ Organization: _____

4.3.1.6 Submergence and manual release test	**Regulations: LSA Code IV/4.1.6.3; MSC.81(70) 1/11.2.3**	
Test Procedure	Acceptance Criteria	Significant Test Data
The hydrostatic release unit should then be tested by applying a buoyant load equal to its designed capacity while the device is submerged in a water or in a water-filled pressure testing tank. It should release at a depth of not more than 4 m. On completion of these tests and resetting, the hydrostatic release unit should be capable of being released manually if it is designed to allow manual release of the unit.	The unit should release the buoyant load at a depth of not more than 4 m. After being reset the unit should be capable of being manually released if it is designed for manual release. It should be opened for inspection and should show no significant signs of corrosion or degradation. The Hydrostatic Release Unit should then next be subjected to the Strength Test of 4.3.1.7	Comments/Observations Depth of release: _____ Passed: _____ Failed: _____

Hydrostatic release units	Manufacturer: _____ Model: _____ Lot/Serial Number: _____	Date: _____ Time: _____ Surveyor: _____ Organization: _____

4.3.1.7 Strength test		**Regulations: LSA Code IV/4.1.6.3; MSC.81(70) 1/11.2.4**
Test Procedure	Acceptance Criteria	Significant Test Data
The unit should be subjected to a tensile test of at least 10 kN for a period of 30 minutes. (15 kN if fitted to a raft for more than 25 persons).	If it is designed to allow manual release of the unit it should then be capable of being operated manually. There should be no change of mechanical properties. The Hydrostatic Release Unit should then next be subjected to Technical tests on the membrane of 4.3.1.8.	Tensile test load: _____ kN Tensile test time: _____ minutes. Operated manually: ____ yes/____ no Comments/Observations Passed: _____ Failed: _____

4.3.1.8 Technical tests on the membrane - 1		**Regulations: LSA Code I/1.2.2; MSC.81(70) 1/11.2.5**
Test Procedure	Acceptance Criteria	Significant Test Data
Resistance to cold: Number of specimens 2 membranes Temperature -30°C Exposure time 30 min Flex testing: 180° with both inside and outside stretched.	Resistance to cold: The membranes should show no visible cracking.	Comments/Observations (Cold): Passed: _____ Failed: _____
Resistance to heat: Number of specimens 2 membranes Temperature +65°C Exposure time 7 days	Resistance to heat: The membranes should show no visible cracking.	Comments/Observations (Heat): Passed: _____ Failed: _____

Hydrostatic release units	Manufacturer: _____ Model: _____ Lot/Serial Number: _____	Date: _____ Time: _____ Surveyor: _____ Organization: _____

4.3.1.9 Technical tests on the membrane - 2	**Regulations: LSA Code I/1.2.2; MSC.81(70) 1/11.6**	
Test Procedure	Acceptance Criteria	Significant Test Data
Test for surface resistance to oil: .1 Number of specimens: 2 membranes .2 Temperature: +18°C to +20°C .3 Type of oil: A mineral oil meeting the following requirements: .a Aniline point: 120°±5°C Flashpoint: minimum 240°C .b Viscosity: 10-25 cSt at 99.0°C .4 The following oils may be used: IRM 901, IRM 905, and ISO Oil No. 1 .5 Testing Period: 3 h on each side	Test for surface resistance to oil: The material should show no deterioration.	Comments/Observations (**oil**) Passed: _____ Failed: _____
Resistance to natrium Chloride: Two membranes should be immersed for 7 days in 5% natrium chloride solution at a test temperature of +18°C to +20°C.	Resistance to seawater: The material should show no deterioration.	Comments/Observations (**seawater**) Passed: _____ Failed: _____
Resistance to detergents: Two membranes should be immersed for 7 days in detergents commonly used on board ships at least temperature of +18°C to +20°C.	Resistance to detergents: The membranes should not be affected by the detergents. The Hydrostatic Release Unit should then next be subjected to the Solar radiation test of 4.3.1.10.	Comments/Observations (**detergents**) Types used: - Passed: _____ Failed: _____

Hydrostatic release units	Manufacturer: _____ Model: _____ Lot/Serial Number: _____	Date: _____ Time: _____ Surveyor: _____ Organization: _____

4.3.1.10 Solar radiation test		**Regulations: LSA Code I/1.2.2; MSC.81(70) 1/11.2.6**
Test Procedure	Acceptance Criteria	Significant Test Data
Solar radiation test: One unit should be subjected to a solar radiation test to paragraph 8.10 of standard IEC 60945:2002. Note: The solar radiation test may be waived where the manufacturer is able to produce evidence that the materials employed will satisfy the test, i.e. UV stabilized.	Solar radiation test:	Comments/Observations (Solar radiation) Passed: _____ Failed: _____

Hydrostatic release units	Manufacturer: _____ Model: _____ Lot/Serial Number: _____	Date: _____ Time: _____ Surveyor: _____ Organization: _____

4.3.1.11 Performance test		**Regulations: LSA Code IV/4.1.6.3; MSC.81(70) 1/11.3.1 & 11.3.2**
Test Procedure	Acceptance Criteria	Significant Test Data
This test should be performed using the smallest and the largest liferafts with which the hydrostatic release unit may be used. If the occupant range between the smallest and largest liferaft exceeds 25 persons, then the intermediate size liferaft should also be tested. The liferaft should be placed horizontally on a rack or platform of sufficient weight to submerge the liferaft. The hydrostatic release unit and painter should be installed as aboard a ship. The following tests should be carried out in a suitable depth of water. The platform should be lowered into the water as follows: .1 Raft horizontal. .2 Raft tilted 45° with the HRU at the lower side. .3 Raft tilted 100° with the HRU at the lower side. .4 Raft tilted 45° with the HRU at the upper side. .5 Raft tilted 100° with the HRU at the upper side. .6 Raft vertically.	In all tests the hydrostatic release unit should release the liferaft at a depth of less than 4.0 m.	Release in the following positions: .1 Raft horizontal: Passed/Failed .2 Raft tilted 45° with the HRU at the lower side: Passed/Failed .3 Raft tilted 100° with the HRU at the lower side: Passed/Failed .4 Raft tilted 45° with the HRU at the upper side: Passed/Failed .5 Raft tilted 100° with the HRU at the upper side: Passed/Failed .6 Raft vertically: Passed/Failed Comments/Observations Passed: _____ Failed: _____

4.3.1.12 Weak link test		**Regulations: LSA Code IV/4.1.6.2; MSC.81(70) 1/5.15**
Hydrostatic release units	Manufacturer: _____ Model: _____ Lot/Serial Number: _____	Date: _____ Time: _____ Surveyor: _____ Organization: _____

Test Procedure	Acceptance Criteria	Significant Test Data
The weak link should be strength tested (if not tested together with the liferaft painter system).	A weak link in the painter system should have a breaking strain of 2.2 ±0.4kN. The weak link should not be broken by the force required to pull the painter from the liferaft container. If applicable, the weak link should be of sufficient strength to permit the inflation of the liferaft.	Measured breaking strain: _____ Comments/Observations Passed:_____ Failed: _____

4.3.2 LIFEBOAT AND RESCUE BOAT INBOARD ENGINES

EVALUATION AND TEST REPORT

4.3.2.1 Submitted drawings, reports and documents

4.3.2.2 Quality assurance

4.3.2.3 Cold engine starting test

4.3.2.4 Engine-out-of-water test

4.3.2.5 Submerged engine test

4.3.2.6 Engine inversion test

4.3.2 LIFEBOAT AND RESCUE BOAT INBOARD ENGINES

EVALUATION AND TEST REPORT

Manufacturer	
Engine type	
Serial number	
Fuel type	
Design power output (kW)	
Propeller diameter and pitch	
Gear box type and No.	
Required battery capacity	
Starting aids	
Date	
Place	
Name and signature of surveyor	
Approval Organization	

Lifeboat and rescue boat inboard engines	Manufacturer: _____ Model: _____ Lot/Serial Number: _____	Date: _____ Time: _____ Surveyor: _____ Organization: _____

4.3.2.1 Submitted drawings, reports and documents

Submitted drawings and documents			**Status**
Drawing No.	**Revision No. & date**	**Title of drawing**	

Submitted reports and documents			**Status**
Report/Document No.	**Revision No. & date**	**Title of report / document**	
		Maintenance Manual -	
		Operations Manual -	

Lifeboat and rescue boat inboard engines	Manufacturer: _____ Model: _____ Lot/Serial Number: _____	Date: _____ Time: _____ Surveyor: _____ Organization: _____

4.3.2.2 Quality assurance	**Regulations: MSC.81(70) 2/1.1 and 1.2**
Except where all appliances of a particular type are required by chapter III of the International Convention for the Safety of Life at Sea, 1974, as amended, or the International Life-Saving Appliance (LSA) Code, or the International Life-Saving Appliance (LSA) Code to be inspected, representatives of the Administration should make random inspection of manufacturers to ensure that the quality of life-saving appliances and the materials used comply with the specification of the approved prototype life-saving appliance. Manufacturers should be required to institute a quality control procedure to ensure that life-saving appliances are produced to the same standard as the prototype life-saving appliance approved by the Administration and to keep records of any production tests carried out in accordance with the Administration's instructions.	Quality assurance Standard Used: _____ Quality assurance Procedure: _____ Quality assurance Manual: _____ Description of System: Quality assurance System acceptable Yes/No Comments/Observations:

Lifeboat and rescue boat inboard engines	Manufacturer: _____ Model: _____ Lot/Serial Number: _____	Date: _____ Time: _____ Surveyor: _____ Organization: _____

4.3.2.3 Cold engine starting test		**Regulations: LSA Code 4.4.6.2; MSC.81(70) 1/6.10.2 - 6.10.4**
Test Procedure	Acceptance Criteria	Significant Test Data
The engine may be removed from the lifeboat for this test, however, it should be equipped with accessories and the transmission that will be used in the lifeboat. The engine, along with its fuel and coolant and starting power sources and any necessary starting aids should also be provided and should be placed in a chamber at a temperature of -15°C. The temperature of the fuel, lubricating oil and cooling fluid (if any) should be measured at the beginning of this test and should not be higher than -15°C. Samples of each fluid at this temperature should be collected in a container for observation. The engine should be started three times. The first two times, the engine should be allowed to operate long enough to demonstrate that it runs at operating speed. After the first two starts the engine should be allowed to stand until all parts have again reached chamber temperature. After the third start, the engine should be allowed to continue to run for a least 10 min and during this period the transmission should be operated through its gear positions.	The engine should be provided with either a manual starting system, or a power starting system with two independent rechargeable energy sources. The engine starting systems and starting aids should start the engine at an ambient temperature of -15°C within 2 min of commencing the start procedure unless, in the opinion of the Administration having regard to the particular voyages in which the ship carrying the lifeboat is constantly engaged, a different temperature is appropriate.	Starting power source: Starting aids used: Measured temperatures: • Chamber: _____ °C • Fuel: _____ °C • Lubricant oil: _____ °C • Cooling fluid: _____ °C Number of starts:__times Duration of first run: _____ min. Duration of second run:_____min. Duration of last run: _____ min. Required capacity and Cold Cranking Amps of starting battery? Administration's limit on operating temperature range? Passed/Failed Comments/Observations

Lifeboat and rescue boat inboard engines	Manufacturer: _____ Model: _____ Lot/Serial Number: _____	Date: _____ Time: _____ Surveyor: _____ Organization: _____

4.3.2.4 Engine-out-of-water test	**Regulations: LSA Code 4.4.6.3; MSC.81(70) 1/6.10.5**	
Test Procedure	Acceptance Criteria	Significant Test Data
The engine should be operated for at least 5 min at idling speed under conditions simulating normal storage.	The engine should be capable of operating for not less than 5 min after starting from cold with the lifeboat out of the water. The engine should not be damaged as a result of this test.	Temperature of storage location: _____ °C Type of Impeller (If applicable): _____ Duration: _____ min Any damage after this test? Passed/Failed For engines with "wet" exhaust system: Impeller damaged after test: Y/N Comments/Observations

4.3.2.5 Submerged engine test	**Regulations: LSA Code 4.4.6.4; MSC.81(70) 1/6.10.6**	
Test Procedure	Acceptance Criteria	Significant Test Data
The engine should be operated for at least 5 min while submerged in water to the level of the centreline of the crankshaft with the engine in a horizontal position.	The engine should be capable of operating when the lifeboat is flooded up to the centreline of the crankshaft. The engine should not be damaged as a result of this test.	Engine flooded up to centreline of crankshaft? Yes / No Duration: _____min Any damage after this test? Passed/Failed Condition of engine oil? Passed/Failed Comments/Observations

4.3.2.6 Engine inversion test		**Regulations: LSA Code 4.6.4.2; MSC.81(70) 1/6.14.6 - 6.14.8**
Test Procedure	Acceptance Criteria	Significant Test Data
The engine and its fuel tank should be mounted on a frame that is arranged to rotate about an axis equivalent to the longitudinal axis of the boat. A pan should be located under the engine to collect any oil which may leak from the engine so that the quantity of such oil can be measured. The following procedure should be followed during this test: .1 start the engine and run it at full speed for 5 min; .2 stop the engine and rotate it in a clockwise direction through 360°; .3 restart the engine and run it at full speed for 10 min; .4 stop the engine and rotate it in a counter- clockwise direction through 360°; .5 restart the engine, run it at full speed for 10 min, and then stop the engine; .6 allow the engine to cool; .7 restart the engine and run it at full speed for 5 min;	The engine and engine installation should be capable of running in any position during capsize and continue to run after the lifeboat returns to the upright or should automatically stop on capsizing and be easily restarted after the lifeboat returns to the upright. The design of the fuel and lubricating systems should prevent the loss of fuel and the loss of more than 250 ml of lubricating oil from the engine during capsize. During these tests, the engine should not overheat, fail to operate or leak more than 250 ml of oil during any one inversion. When examined after being dismantled the engine should show no evidence of overheating or excessive wear. Note: These tests are only applicable for self-righting totally enclosed lifeboats and fast rescue boats.	Passed: _____ Failed: _____ Comments/Observations:

Lifeboat and rescue boat inboard engines	Manufacturer: _____ Model: _____ Lot/Serial Number: _____	Date: _____ Time: _____ Surveyor: _____ Organization: _____

4.3.2.6 Engine inversion test (cont'd)		**Regulations: LSA Code 4.6.4.2; MSC.81(70) 1/6.14.6 - 6.14.8**
Test Procedure	Acceptance Criteria	Significant Test Data
The following procedure should be followed during this test (Continued): .8 slowly rotate the running engine in a clockwise direction through 180°, hold at the 180° position for 10 s, and then rotate it 180° further in a clockwise direction to complete one revolution; .9 if the engine is arranged to stop automatically when inverted, restart it; .10 allow the engine to continue to run at full speed for 10 min; .11 shut the engine down and allow it to cool; .12 repeat the procedure in .7 through .11 above, except that the engine should be turned in a counterclockwise direction; .13 restart the engine and run it at full speed for 5 min; .14 rotate the engine in a clockwise direction through 180° and stop the engine. Rotate it 180° further to complete a full clockwise revolution; .15 restart the engine and run it at full speed for 10 min; .16 repeat the procedure in .14 above, turning the engine counterclockwise; .17 restart the engine, run it at full speed for 10 min and then shut it down; and .18 dismantle the engine for examination.	During these tests, the engine should not overheat, fail to operate or leak more than 250 ml of oil during any one inversion. When examined after being dismantled the engine should show no evidence of overheating or excessive wear.	Are all the tests carried out according to the procedure as prescribed? Passed/Failed Does the engine stop when turned in either direction? Passed/Failed If it stops, does it easily restart? Passed/Failed Does the engine fulfil the requirements after the tests have been carried out according to the procedure? Passed/ Failed Amount of oil lost from engine during each inversion: .2: _____ ml .4: _____ ml .8: _____ ml .12: _____ ml .14: _____ ml .16: _____ ml Total amount of oil lost from engine: _____ml Evidence of overheating or excessive wear? Passed/ Failed Amount of oil lost from engine: _____ ml Comments/Observations

EVALUATION AND TEST REPORT

4.3.3.1 Submitted drawings, reports and documents

4.3.3.1.1 Quality assurance

4.3.3.2 Measure dimensions

4.3.3.3 Temperature cycling test

4.3.3.4 Examination of internal structure

4.3.3.5 Temperature cycling and water absorption test

4.3.3.6 Temperature cycling, high octane petroleum spirit and water absorption test

4.3.3.7 Tests for water absorption

4.3.3.8 Crude oil test

4.3.3.9 Marine fuel oil test (Grade C)

4.3.3.10 Diesel oil test (Grade A)

4.3.3.11 High octane petroleum spirit test

4.3.3.12 Kerosene test

4.3.3 LIFEBOAT BUOYANT MATERIAL

EVALUATION AND TEST REPORT

Manufacturer	
Type/Model	
Date of Approval	
Place	
Name Surveyor printed	
Signature	
Approving Organization	

Lifeboat buoyant material	Manufacturer: _____ Model: _____ Lot/Serial Number: _____	Date: _____ Time: _____ Surveyor: _____ Organization: _____

4.3.3.1 Submitted drawings, reports and documents

Submitted drawings and documents			**Status**
Drawing No.	**Revision No. & date**	**Title of drawing**	

Submitted reports and documents			**Status**
Report/Document No.	**Revision No. & date**	**Title of report/document**	
		Maintenance Manual -	
		Operations Manual -	

Lifeboat buoyant material	Manufacturer: _____ Model: _____ Lot/Serial Number: _____	Date: _____ Time: _____ Surveyor: _____ Organization: _____

4.3.3.1.1 Quality assurance	**Regulations: MSC.81(70)2/1.1,1.2**
Except where all appliances of a particular type are required by chapter III of the International Convention for the Safety of Life at Sea, 1974, as amended, or the International Life-Saving Appliance (LSA) Code to be inspected, representatives of the Administration should make random inspections of manufacturers to ensure that the quality of life-saving appliances and materials used comply with the specification of the approved prototype life-saving appliance. Manufacturers should be required to institute a quality control procedure to ensure that life-saving appliances are produced to the same standard as the prototype life-saving appliance approved by the Administration and to keep records of any production tests carried out in accordance with the Administration's instructions.	Quality assurance Standard Used: _____ Quality assurance Procedure: _____ Quality assurance Manual: _____ Description of System: Quality assurance System acceptable? Yes/No Comments/Observations:

Lifeboat buoyant material	Manufacturer: _____ Model: _____ Lot/Serial Number: _____	Date: _____ Time: _____ Surveyor: _____ Organization: _____

TEST ITEMS CONDITIONING SEQUENCE	**REFERENCES**									**REMARKS**	
	1-2	3-4	5-6	7-8	9-10	11-12	13-14	15-16	17-18	MSC 70/23/Add.1	
Measure dimensions (4.3.3.2)	A	A	A	A	A	A	A	A	A		
Temperature cycling test (4.3.3.3)	B	B	B								
Measure dimensions at end of temperature cycling test. (4.3.3.3)	C	C	C								
Examination of internal structure (4.3.3.4)	D										
Measure initial buoyancy		D	D	D	D	D	D	D	D		
High octane petroleum spirit (4.3.3.6) & (4.3.3.11)			E					E			
Crude oil (4.3.3.8)					E						
Marine fuel oil (Grade C) (4.3.3.9)						E					
Diesel oil (Grade A) (4.3.3.10)							E				
Kerosene (4.3.3.12)									E		
Measure dimensions			F		F	F	F	F	F		
Fresh water absorption test (4.3.3.5) & (4.5.2.7)		G	G	G	G	G	G	G	G		
Measure dimensions		H	H	H	H	H	H	H	H		
Measure final buoyancy		I	I	I	I	I	I	I	I		

Lifeboat buoyant material	Manufacturer: _____ Model: _____ Lot/Serial Number: _____	Date: _____ Time: _____ Surveyor: _____ Organization: _____

4.3.3.2 Measure dimensions		**Regulations: LSA Code 1.2; MSC.81(70) 1/6.2 and 2.6**	
Test Procedure	Acceptance Criteria	Significant Test Data	
Measure the dimensions of the specimens The specimens should be at least 300 mm square and be of the same thickness as used in the lifejacket.		1_____X_____X _____	11_____X_____X _____
		2_____X_____X _____	12_____X_____X _____
		3_____X_____X _____	13_____X_____X _____
		4_____X_____X _____	14_____X_____X _____
		5_____X_____X _____	15_____X_____X _____
		6_____X_____X _____	16_____X_____X _____
		7_____X_____X _____	17_____X_____X _____
		8_____X_____X _____	18_____X_____X _____
		9_____X_____X _____	19_____X_____X _____
		10_____X_____X _____	20_____X_____X _____
		Passed: _____ Failed: _____ Comments/Observations:	

Lifeboat buoyant material	Manufacturer: _____ Model: _____ Lot/Serial Number: _____	Date: _____ Time: _____ Surveyor: _____ Organization: _____

4.3.3.3 Temperature cycling test	**Regulations: LSA Code 1.2; MSC.81(70) 1 /1.2.1, 6.2.2 and 2.6.1**	
Test Procedure	Acceptance Criteria	Significant Test Data
Six specimens should be subjected for 8 hours to surrounding temperatures of -30°C and +65°C. These alternating cycles need not follow immediately after each other and the following procedure, repeated for ten cycles is acceptable: .1 An 8 h exposure at a minimum temperature of +65°C to be completed in one day; and .2 the specimens removed from the warm chamber that same day and left exposed under ordinary room conditions at a temperature of 20°C ±3°C until the next day; .3 an 8 h exposure at a maximum temperature of -30°C to be completed the next day; and .4 the specimens removed from the cold chamber that same day and left exposed under ordinary room conditions at a temperature of 20°C ±3°C until the next day.	The dimensions of the specimens should be recorded at the end of the ten-cycle period. The specimens should be carefully examined and should not show any sign of external change of structure or of mechanical qualities.	Dimensions before test Dimensions after test 1 ___ X ___X ___ ___ X ___X ___ 2 ___ X ___X ___ ___ X ___X ___ 3 ___ X ___X ___ ___ X ___X ___ 4 ___ X ___X ___ ___ X ___X ___ 5 ___ X ___X ___ ___ X ___X ___ 6 ___ X ___X ___ ___ X ___X ___ Passed: _____ Failed: _____ Comments/Observations

4.3.3.4 Examination of internal structure	**Regulations: LSA Code 1.2; MSC.81(70) 1/2.6.1 and 2.6.3**	
Test Procedure	Acceptance Criteria	Significant Test Data
Following the temperature cycling test, two of the specimens should be cut open and examined.	Neither of the two specimens cut open should show any sign of internal change of structure.	Specimen No. 1 Internal condition (Passed/Failed) Specimen No. 2 Internal condition (Passed/Failed) Comments/Observations

Lifeboat buoyant material	Manufacturer: _____ Model: _____ Lot/Serial Number: _____	Date: _____ Time: _____ Surveyor: _____ Organization: _____

4.3.3.5 Temperature cycling and water absorption test		**Regulations: LSA Code 1.2; MSC.81(70) 1/2.6.7 & 6.2.2**
Test Procedure	Acceptance Criteria	Significant Test Data
The test should be carried out on two specimens which have been subjected to the temperature cycling test. The test should be carried out in fresh water and the specimens should be immersed for a period of seven days under a 1.25 m head of water. The results should state the buoyant force in N which each specimen could support out of the water after 1 and 7 days immersion (the selection of a test method suitable for obtaining this result directly or indirectly is left to the discretion of the testing authority).	The reduction of buoyancy should not exceed 5%. The specimens should show no signs of damage such as shrinking, cracking swelling, dissolution or change of mechanical qualities.	Dimensions before test Dimensions after test 3 ___ X ___ X ___ ___ X ___ X ___ 4 ___ X ___ X ___ ___ X ___ X ___ % change in dimensions 3 _____ % 4 _____ % Buoyancy after 1 day Buoyancy after 7 days 3 _____ _____ 4 _____ _____ % change in buoyancy 3 _____% 4 _____% Comments/Observations Passed: _____ Failed: _____

Lifeboat buoyant material	Manufacturer: _____ Model: _____ Lot/Serial Number: _____	Date: _____ Time: _____ Surveyor: _____ Organization: _____

4.3.3.6 Temperature cycling, high octane petroleum spirit and water absorption test	**Regulations: LSA Code 1.2; MSC.81(70) 1/2.6.1, 2.6.6.3, 6.2.2 & 6.2.5**	
Test Procedure	Acceptance Criteria	Significant Test Data
The test should be carried out on two specimens which have been subjected to the temperature cycling test followed by being immersed horizontally for a period of 24 h under 100 mm head of high-octane petroleum spirit at normal room temperature. After completing the above the test should be carried out in fresh water and the specimens should be immersed for a period of seven days under a 1.25 m head of water. The dimensions should be recorded at the beginning and end of these tests. The results should state the buoyant force in N which each specimen could support out of the water after one and seven days immersion (the selection of a test method suitable for obtaining this result directly or indirectly is left to the discretion of the testing authority).	The reduction of buoyancy should not exceed 16%. The specimens should show no sign of damage such as shrinking, cracking swelling, dissolution or change of mechanical qualities.	Dimensions before test Dimensions after test 5_____X_____X_____ _____X_____X _____ 6_____X_____X_____ _____X_____X _____ % change in dimensions 5 _____% 6 _____% Buoyancy after 1 day Buoyancy after 7 days 5 _____ _____ 6 _____ _____ % change in buoyancy 5 _____% 6 _____% Comments/Observations Passed: _____ Failed: _____

Lifeboat buoyant material	Manufacturer: _____ Model: _____ Lot/Serial Number: _____	Date: _____ Time: _____ Surveyor: _____ Organization: _____

4.3.3.7 Tests for water absorption		**Regulations: LSA Code 1.2; MSC.81(70) 1/2.6.5, 2.6.6, 6.2.2 & 6.2.8**
Test Procedure	Acceptance Criteria	Significant Test Data
The test should be carried out on two specimens as supplied. The dimensions should be recorded at the beginning and end of these tests. The test should be carried out in fresh water and the specimens should be immersed for a period of seven days under a 1.25 m head of water. The results should state the buoyant force in N which each specimen could support out of the water after one and seven days immersion (the selection of a test method suitable for obtaining this result directly or indirectly is left to the discretion of the testing authority).	The reduction of buoyancy should not exceed 5%. The specimens should show no sign of damage such as shrinking, cracking swelling, dissolution or change of mechanical qualities.	Dimensions before test Dimensions after test 7_____X_____X_____ _____X_____X _____ 8_____X_____X_____ _____X_____X _____ % change in dimensions 7 _____% 8 _____% Buoyancy after 1 day Buoyancy after 7 days 7 _____ _____ 8 _____ _____ % change in buoyancy 7 _____% 8 _____% Comments/Observations Passed: _____ Failed: _____

Lifeboat buoyant material	Manufacturer: _____ Model: _____ Lot/Serial Number: _____	Date: _____ Time: _____ Surveyor: _____ Organization: _____

4.3.3.8 Crude oil test		**Regulations: LSA Code 1.2; MSC.81(70) 1/6.2.2, 6.2.3.1, 6.2.7 & 2.6.7**
Test Procedure	Acceptance Criteria	Significant Test Data
Two specimens of the material should be immersed in crude oil for a period of 14 days under a 100 mm head. The specimens should be tested as supplied by the manufacturer and at normal room temperature (approximately 18°C). After completing the above immersion, the two specimens should be immersed for a period of seven days under a 1.25 m head of water. The results should state the buoyant force in N which each specimen could support out of the water after one and seven days immersion (the selection of a test method suitable for obtaining this result directly or indirectly is left to the discretion of the testing authority).	The reduction of buoyancy must not exceed 5%. The two specimens should show no sign of damage such as shrinking, cracking, swelling, dissolution or change of mechanical qualities.	Dimensions before test Dimensions after test 9_____X_____X_____ _____X_____X _____ 10_____X_____X_____ _____X_____X _____ % change in dimensions 9 _____% 10 _____% Buoyancy after 1 day Buoyancy after 7 days 9 _____ _____ 10 _____ _____ % change in buoyancy 9 _____% 10 _____% Comments/Observations Passed: _____ Failed: _____

Lifeboat buoyant material	Manufacturer: _____ Model: _____ Lot/Serial Number: _____	Date: _____ Time: _____ Surveyor: _____ Organization: _____

4.3.3.9 Marine fuel oil test (Grade C)*		**Regulations: LSA Code 1.2; MSC.81(70) 1/6.2.2, 6.2.3.2, 6.2.7 & 2.6.7**
Test Procedure	Acceptance Criteria	Significant Test Data
Two specimens of the material should be immersed in marine fuel oil (grade C) for a period of 14 days under a 100 mm head. The specimens should be tested as supplied by the manufacturer and at normal room temperature (approximately 18°C). After completing the above immersion, the two specimens should be immersed for a period of seven days under a 1.25 m head of water. The results should state the buoyant force in N which each specimen could support out of the water after one and seven days immersion (the selection of a test method suitable for obtaining this result directly or indirectly is left to the discretion of the testing authority). * Refer to ISO standards ISO 8216 and ISO 8217– Petroleum products.	The reduction of buoyancy must not exceed 5%. The specimen should show no sign of damage such as shrinking, cracking, swelling, dissolution or change of mechanical qualities.	Dimensions before test / Dimensions after test 11_____X_____X_____ _____X_____X _____ 12_____X_____X_____ _____X_____X _____ % change in dimensions 11 _____% 12 _____% Buoyancy after 1 day / Buoyancy after 7 days 11 _____ _____ 12 _____ _____ % change in buoyancy 11 _____% 12 _____% Comments/Observations Passed: _____ Failed: _____

Lifeboat buoyant material	Manufacturer: _____ Model: _____ Lot/Serial Number: _____	Date: _____ Time: _____ Surveyor: _____ Organization: _____

4.3.3.10 Diesel oil test (Grade A)*		**Regulations: LSA Code 1.2; MSC.81(70) 1/6.2.2, 6.2.3.3, 6.2.7 & 2.6.7**
Test Procedure	Acceptance Criteria	Significant Test Data
Two specimens of the material should be immersed in diesel oil (grade A) for a period of 14 days under a 100 mm head. The specimens should be tested as supplied by the manufacturer and at normal room temperature (approximately 18°C) After completing the above immersion, the two specimens should be immersed for a period of seven days under a 1.25 m head of water. The results should state the buoyant force in N which each specimen could support out of the water after one and seven days immersion (the selection of a test method suitable for obtaining this result directly or indirectly is left to the discretion of the testing authority). * Refer to ISO standards ISO 8216 and ISO 8217– Petroleum products.	The reduction of buoyancy must not exceed 5% The specimen should show no sign of damage such as shrinking, cracking, swelling, dissolution or change of mechanical qualities.	Dimensions before test Dimensions after test 13_____X_____X_____ _____X_____X _____ 14_____X_____X_____ _____X_____X _____ % change in dimensions 13 _____% 14 _____% Buoyancy after 1 day Buoyancy after 7 days 13 _____ _____ 14 _____ _____ % change in buoyancy 13 _____% 14 _____% Comments/Observations Passed: _____ Failed: _____

Lifeboat buoyant material	Manufacturer: _____ Model: _____ Lot/Serial Number: _____	Date: _____ Time: _____ Surveyor: _____ Organization: _____

4.3.3.11 High octane petroleum spirit test		**Regulations: LSA Code 1.2; MSC.81(70) 1/6.2.2, 6.2.3.4, 6.2.7 & 2.6.7**
Test Procedure	Acceptance Criteria	Significant Test Data
Two specimens of the material should be immersed in high octane petroleum spirit for a period of 14 days under a 100 mm head. The specimens should be tested as supplied by the manufacturer and at normal room temperature (approximately 18°C). After completing the above immersion, the two specimens should be immersed for a period of seven days under a 1.25 m head of water. The results should state the buoyant force in N which each specimen could support out of the water after one and seven days immersion (the selection of a test method suitable for obtaining this result directly or indirectly is left to the discretion of the testing authority).	The reduction of buoyancy must not exceed 5%. The specimen should show no sign of damage such as shrinking, cracking, swelling, dissolution or change of mechanical qualities.	Dimensions before test Dimensions after test 15_____X_____X_____ _____X_____X _____ 16_____X_____X_____ _____X_____X _____ % change in dimensions 15 _____% 16 _____% Buoyancy after 1 day Buoyancy after 7 days 15 _____ _____ 16 _____ _____ % change in buoyancy 15 _____% 16 _____% Comments/Observations Passed: _____ Failed: _____

Lifeboat buoyant material	Manufacturer: _____ Model: _____ Lot/Serial Number: _____	Date: _____ Time: _____ Surveyor: _____ Organization: _____

4.3.3.12 Kerosene test		**Regulations: LSA Code 1.2; MSC.81(70) 1/6.2.2, 6.2.3.5, 6.2.7 & 2.6.7**
Test Procedure	Acceptance Criteria	Significant Test Data
Two specimens of the material should be immersed in kerosene for a period of 14 days under a 100 mm head. The specimens should be tested as supplied by the manufacturer and at normal room temperature (approximately 18°C). After completing the above immersion, the two specimens should be immersed for a period of 7 days under a 1.25 m head of water. The results should state the buoyant force in N which each specimen could support out of the water after one and seven days immersion (the selection of a test method suitable for obtaining this result directly or indirectly is left to the discretion of the testing authority).	The reduction of buoyancy must not exceed 5%. Specimen should show no sign of damage such as shrinking, cracking, swelling, dissolution or change of mechanical qualities.	Dimensions before test Dimensions after test 17_____X_____X_____ _____X_____X _____ 18_____X_____X_____ _____X_____X _____ % change in dimensions 17 _____% 18 _____% Buoyancy after 1 day Buoyancy after 7 days 17 _____ _____ 18 _____ _____ % change in buoyancy 17 _____% 18 _____% Comments/Observations Passed: _____ Failed: _____

4.3.4 INFLATABLE LIFERAFT MATERIALS

EVALUATION AND TEST REPORT

4.3.4.0 Submitted drawings, reports and documents

4.3.4.1 Quality assurance

4.3.4.2 Fabric marking and selection

4.3.4.3 Tensile strength

4.3.4.4 Tear strength

4.3.4.5 Surface receptiveness and adhesion of surface coating

4.3.4.6 Effects of ageing

4.3.4.7 Low temperature flexing

4.3.4.8 Flex cracking

4.3.4.9 Porosity

4.3.4.10 Oil resistance

4.3.4.11 Weft distortion

4.3.4.12 Resistance to blocking

4.3.4.13 Hydrolysis resistance for thermoplastic coated materials only

4.3.4.14 Ozone resistance

4.3.4.15 Tensile strength (Fabrics used for outer canopies)

4.3.4.16 Tear strength (Fabrics used for outer canopies)

4.3.4.17 Low temperature flexing (Fabrics used for outer canopies)

4.3.4.18 Waterproofness (Fabrics used for outer/inner canopies)

4.3.4.19 Surface receptiveness and adhesion of surface coating (Fabrics used for outer canopies)

4.3.4.20 Colour (Fabrics used for outer canopies)

4.3.4.21 Effect of ageing (Fabrics used for outer canopies)

4.3.4.22 Tensile strength (Fabrics used for inner canopies)

4.3.4.23 Porosity (Fabrics used for inner canopies)

4.3.4 INFLATABLE LIFERAFT MATERIALS

EVALUATION AND TEST REPORT

Manufacturer	
Type	
Date of Approval	
Place	
Name Surveyor printed	
Signature	
Approving Organization	

Inflatable liferaft materials	Manufacturer: _____ Model: _____ Lot/Serial Number: _____	Date: _____ Time: _____ Surveyor: _____ Organization: _____

4.3.4.0 Submitted drawings, reports and documents

Submitted drawings and documents			**Status**
Drawing No.	**Revision No. & date**	**Title of drawing**	

Submitted reports and documents			**Status**
Report/Document No.	**Revision No. & date**	**Title of report/document**	

Inflatable liferaft materials	Manufacturer: _____ Model: _____ Lot/Serial Number: _____	Date: _____ Time: _____ Surveyor: _____ Organization: _____

4.3.4.1 Quality assurance	**Regulations: MSC.81(70)2/1.1,1.2**
Except where all appliances of a particular type are required by chapter III of the International Convention for the Safety of Life at Sea, 1974, or the International Life-Saving Appliance (LSA) Code, as amended, to be inspected, representatives of the Administration should make random inspections of manufacturers to ensure that the quality of life-saving appliances and materials used comply with the specification of the approved prototype life-saving appliance. Manufacturers should be required to institute a quality control procedure to ensure that life-saving appliances are produced to the same standard as the prototype life-saving appliance approved by the Administration and to keep records of any production tests carried out in accordance with the Administration's instructions.	Quality assurance Standard Used: _____ Quality assurance Procedure: _____ Quality assurance Manual: _____ Description of System: Quality assurance System acceptable? Yes/No Comments/Observations:

Inflatable liferaft materials	Manufacturer: _____ Model: _____ Lot/Serial Number: _____	Date: _____ Time: _____ Surveyor: _____ Organization: _____

4.3.4.2 Fabric Marking & Selection	**Regulations: LSA Code IV/4.2; MSC.81(70) 1/5.17.13.1**	
Test Procedure	Acceptance Criteria	Significant Test Data
	The fabric should be marked in such a manner as to allow traceability of the fabric manufacturer and production LOT number.	Is the fabric marked? YES_NO Marking Schedule: _____ Comments/Observations Passed: _____ Failed: _____

4.3.4.3 Tensile Strength	**Regulations: LSA Code IV/4.2; MSC.81(70) 1/5.17.13.2.2.1**	
Test Procedure	Acceptance Criteria	Significant Test Data
Tensile Strength ISO 1421:1998	When tested by the method described in ISO 1421:1998 the tensile strength should be a minimum of 2255 N/50 mm width for warp and weft. Maximum elongation, for the above should be 30% over a 200 mm gauge length, the elongation should be expressed as a percentage of the initial test length between the jaws. Where two layers of floor fabric are provided to form an inflatable floor, the main floor should be as specified. The inner/outer layer may have a minimum tensile strength of 1470 N/50 mm widths in warp and weft direction.	Warp tensile strength _____N/50mm Weft tensile strength _____ N/50mm Warp elongation _____ % Weft elongation _____ % The floor inner/outer layer tensile strength: Warp _____ N/50mm Weft _____ N/50mm Comments/Observations Passed: _____ Failed: _____

Inflatable liferaft materials	Manufacturer: _____ Model: _____ Lot/Serial Number: _____	Date: _____ Time: _____ Surveyor: _____ Organization: _____

4.3.4.4 Tear Strength	**Regulations: LSA Code IV/4.2; MSC.81(70) 1/5.17.13.2.2.2**	
Test Procedure	Acceptance Criteria	Significant Test Data
Tear Strength ISO 1421:1998	When tested with the apparatus described in ISO 1421:1998, the tear strength should be: Minimum warp and weft 1030 N. Where two layers of the floor fabric are provided to form an inflatable floor, the main floor should be as specified. The inner/outer layer may have a minimum tear strength of 735 N in warp and weft direction The preparation of the test specimens should be as follows: .1 From the test sample cut 3 specimens each in warp and weft directions, 76 mm ±1 mm wide and 400 mm long, with the length closely parallel to the warp and weft yarns. Space the selection across the full length and width of the sample. Make a 12.5 mm cut across the middle of each specimen at right angles to the length. .2 Grip the specimen under test securely and evenly in the grips, which should be 200 mm apart, so that the specimen length is closely in the direction of the pull. Operate the machine in accordance with ISO 1421:1998. The maximum load sustained is recorded as the wound tear strength, and the average for the 3 specimens is calculated.	<u>Tear strength</u> Warp _____N Weft _____N (record for samples 1,2, 3 and average) <u>The floor inner/outer layer tear strength</u> Warp _____N Weft _____N (record for samples 1, 2, 3 and average) Comments/Observations Passed: _____ Failed: _____

Inflatable liferaft materials	Manufacturer: _____ Model: _____ Lot/Serial Number: _____	Date: _____ Time: _____ Surveyor: _____ Organization: _____

4.3.4.5 Surface Receptiveness and Adhesion of Surface Coating	**Regulations: LSA Code IV/4.2; MSC.81(70) 1/5.17.13.2.2.3**	
Test Procedure	Acceptance Criteria	Significant Test Data
Surface Receptiveness and Adhesion of Surface Coating ISO 2411:2000	.1 When tested by the method described in ISO 2411:2000 the Surface Receptiveness on either face should not be less than 75 N/50 mm width. .2 For dry Surface Coating Adhesion a minimum of 75 N/50 mm is required. .3 For wet Surface Coating Adhesion as described in 4.3.4.5.8 below a minimum of 50 N/50 mm is required. .4 Each coated face should be tested. The specimens should be made up as in ISO 2411:2000 bonding like-coated face to like-coated face. .5 The bonding used and the method of application should be agreed between the liferaft manufacturer and the finished fabric manufacturer, and should be the same as those used during the manufacture of the liferaft. .6 On each test specimen the bonding between the adhesive or weld and the coating should be initially measured to determine the surface receptivity. .7 The adhesion of the coating to the base textile is then measured by cutting through one coating layer to initiate the required mode of separation. .8 After testing in .4 above for adhesion of coating to the base textile the specimen should be immersed for 24 hours in a 3% aqueous solution of sodium chloride at 20°C ±2°C. At the end of the immersion period the specimen should be removed from the solution and, while still wet, tested by the method specified in ISO 2411:2000.	Surface receptiveness Face 1 _____ N/50 mm Face 2 _____ N/50 mm Dry surface-coating adhesion _____ N/50 mm Wet surface-coating adhesion _____ N/50 mm Comments/Observations Passed: _____ Failed: _____

Inflatable liferaft materials	Manufacturer: _____ Model: _____ Lot/Serial Number: _____	Date: _____ Time: _____ Surveyor: _____ Organization: _____

4.3.4.6 Effects of Ageing	**Regulations: LSA Code IV/4.2; MSC.81(70) 1/5.17.13.2.2.4**	
Test Procedure	Acceptance Criteria	Significant Test Data
Effects of Ageing ISO 4892-4:2004	.1 **Folding Test** – when tested as prescribed below there should be no cracks, separation of plies or brittleness visible when the samples are inspected under a magnification of 4.3.4.6.2. .2 **Tensile Test** – when tested as prescribed below the tensile strength after ageing should be not less than 90% of the original tensile strength before ageing. .3 **Ultra-Violet Resistance** – (**option 1**) this test should be performed in accordance with the methods specified in ISO 4892-4:2004 - Open-flame carbon- arc lamps, as follows: .a Expose the conditioned samples to an enclosed carbon arc lamp without "Corex D" filters for 100 h. The carbons should be Copper Clad Sunshine Arc Type, No. 22 for the upper pair and No. 13 for the lower pair, or equivalent. Only the intended outside surface of the fabric is to be exposed to the arc in the testing apparatus. The specimens should be exposed to water spray, with the apparatus operated so that the specimens are exposed to successive cycles of 102 min of light without spray and 18 min of light with spray. The black panel temperature should be 80°C ±5°C. The total exposure time should be 100 h. .b Test the tensile strength of the material after exposure following the procedure in 4.3.4.3. The tensile strength should be not less than 90% of the original tensile strength before ageing. .c The exposed material should be bent, more heavily coated side out, around a 3.2 mm mandrel and examined visually for cracking. There should be no cracking.	Folding test: Were there cracks, separation of plies or brittleness visible YES/ NO Tensile test: Tensile strength after ageing _____ %. Dimensional stability Air _____ % Over water _____ % Comments/Observations % change: - Passed: _____ Failed: _____

Inflatable liferaft materials	Manufacturer: _____ Model: _____ Lot/Serial Number: _____	Date: _____ Time: _____ Surveyor: _____ Organization: _____

4.3.4.6 Effects of Ageing (continued)						**Regulations: LSA Code IV/4.2; MSC.81(70) 1/5.17.13.2.2.4**
Test Procedure	Acceptance Criteria					Significant Test Data
	.3 **Ultra-Violet Resistance** – (**option 2**) Alternatively, this test may be performed in accordance with the methods specified in ISO 4892-2:2006 with amendment 1:2009 – Xenon Arc type testing. The specimens should be exposed under conditions specified below, using a controlled irradiance water-cooled Xenon Arc apparatus for a total exposure time of 150 h.					Inspect for: Stickiness/cracks? YES/NO Separation of piles? YES/NO Brittleness? YES/NO Sample: 1 2 Average Dry aged specimen Wet aged specimen Tensile strength after exposure _____ % Were there cracks in material? YES/NO
	Exposure conditions	Dark cycle (1 hour)	Light cycle (2 hours)			
	Automatic irradiance (Filter Q/B)	Nil	0.55 W/m² -nm at 340 nm			
	Black panel temperature	38°C ± 2°C	70°C ± 2°C			
	Dry bulb temperature	38°C ± 2°C	47°C ± 2°C			
	Relative humidity	95 ± 5%	50 ± 5%			
	Conditioning water	40°C ± 4°C	45°C ± 4°C			
	Water spray	60 min on front and back of specimen	40 min	20 min	60 min	
			Nil	Front of specimen only	Nil	
	Only the intended outside surface of the fabric should be exposed to the arc. The tensile strength of the material should be tested after exposure following the procedure in 4.3.4.3. The tensile strength should be not less than 90% of the original strength before ageing. The exposed material should be bent, with heavily coated side out, around a 3.2 mm mandrel and each coated face examined visually for cracking. There should be no cracking during this examination.					

Inflatable liferaft materials	Manufacturer: _____ Model: _____ Lot/Serial Number: _____	Date: _____ Time: _____ Surveyor: _____ Organization: _____

4.3.4.6 Effects of Ageing (continued)	**Regulations: LSA Code IV/4.2; MSC.81(70) 1/5.17.13.2.2.4**	
Test Procedure	Acceptance Criteria	Significant Test Data
	The performance requirements specified in this subparagraph relate to the behaviour of individual specimens under particular conditions of test. As the spectrum of light from the Carbon Arc differs from that of the Xenon Arc, caution should be exercised in interpreting the test results of both methods. .4 Three separate specimens should be tested as follows: .a Dimensional Stability .b Folding and .c Tensile Strength For 4.3.4.6.4.1 and 4.3.4.6.4.2 cut from the test sample 4 specimens at least 100 mm square with the sides closely parallel to the warp and weft threads. Measure the dimensions of two specimens accurately for 4.3.4.6.4.1. For 4.3.4.6.4.3 cut two sets of specimens as in 4.3.4.3. .5 When tested as below the difference in dimensions of the sample before and after ageing should not differ by more than 2%. .6 Ageing of specimens test procedure: .a Freely suspend one specimen each for 4.3.4.6.4.1 and 4.3.4.6.4.2, and one set of specimens for 4.3.4.6.4.3 in air for 7 days at 70°C ± 2°C. Suspend the other specimens above water in a loosely closed vessel for 7 days at 70°C ±2°C. .b Remove the two measured specimens from the ageing oven. After 15 min at room temperature measure the dimensions and report the percentage changes in warp and weft directions.	% change: Inspect for: Stickiness/cracks? YES/NO Separation of piles? YES/NO Brittleness? YES/NO Sample: 1 2 Average Dry aged specimen Wet aged specimen Comments/Observations Passed: _____ Failed: _____

Inflatable liferaft materials	Manufacturer: _____ Model: _____ Lot/Serial Number: _____	Date: _____ Time: _____ Surveyor: _____ Organization: _____

4.3.4.6 Effects of Ageing (continued)	**Regulations: LSA Code IV/4.2; MSC.81(70) 1/5.17.13.2.2.4**	
Test Procedure	Acceptance Criteria	Significant Test Data
	.c Remove the other two specimens. After 15 min at room temperature fold the specimens consecutively in two directions parallel to the edges at right angles to each other so as to reduce the exposed area of each specimen to one quarter of its original size. Unfold and refold along the same creases but with each fold reversed in direction. After each folding, press the fold by rubbing fingers and thumb along it: inspect the specimens for cracks, separation of plies, stickiness or brittleness. .d For the Tensile Strength Test remove the two sets of specimens from the ageing oven. Dry the wet aged specimens for 1 h in air at 70°C ±2°C, and then condition both sets for 24 h. Test in accordance with paragraph 4.3.4.3.	

4.3.4.7 Low Temperature Flexing	**Regulations: LSA Code IV/4.2; MSC.81(70) 1/5.17.13.2.2.5**	
Test Procedure	Acceptance Criteria	Significant Test Data
Low Temperature Flexing ISO 4675:1990	.1 When tested at a temperature not higher than -50°C by the method prescribed below, there should be no visible cracking of the sample when inspected under a magnification of 2. The test should be independently applied to each face of the coated fabric. .2 The apparatus, preparation of test specimens and test procedure should be as described in ISO 4675:1990, except that: .a when tested at the specified low temperature no specimen should show cracks; and .b there should be six test specimens, three cut with the long side closely parallel to the warp and three cut with the long side closely parallel to the weft direction.	Was there any visible cracking under a magnification of x2: YES/NO Specimen No. Pass ____ Fail: ____ Pass ____ Fail: ____ Pass ____ Fail: ____ Pass ____ Fail: ____ Pass ____ Fail: ____ Pass ____ Fail: ____ Pass ____ Fail: ____ Comments/Observations Passed: _____ Failed: _____

Inflatable liferaft materials	Manufacturer: _____ Model: _____ Lot/Serial Number: _____	Date: _____ Time: _____ Surveyor: _____ Organization: _____

4.3.4.8 Flex Cracking	**Regulations: LSA Code IV/4.2; MSC.81(70) 1/5.17.13.2.2.6**	
Test Procedure	Acceptance Criteria	Significant Test Data
Flex Cracking ISO 7854:1995	After the specimen has been conditioned by exposing the outer face to a 3% aqueous solution of sodium chloride for seven days at 20°C ±2°C, it should be tested as described in ISO 7854:1995. After 200,000 flexings no cracking or delamination should be visible when inspected under a magnification of 2.	After flexing was there any cracking or delamination under a magnification of 2? YES/NO Comments/Observations Passed: _____ Failed: _____

4.3.4.9 Porosity	**Regulations: LSA Code IV/4.2; MSC.81(70) 1/5.17.13.2.2.7.1**	
Test Procedure	Acceptance Criteria	Significant Test Data
Porosity ISO 15372:2000	When tested by the method described below and with a pressure of 27.5 kPa applied and maintained beneath the fabric, there should be no signs of any leakage over a minimum period of 5 min. .1 Test for porosity A specimen of the fabric should be prepared and tested in accordance with ISO 15372:2000/Amd 1:2021, paragraph 6.2.9.2.	Was there any leakage? YES/NO Comments/Observations Passed: _____ Failed: _____

Inflatable liferaft materials	Manufacturer: _____ Model: _____ Lot/Serial Number: _____	Date: _____ Time: _____ Surveyor: _____ Organization: _____

4.3.4.10 Oil resistance		**Regulations: LSA Code IV/4.2; MSC.81(70) 1/5.17.13.2.2.8.1 - .3**
Test Procedure	Acceptance Criteria	Significant Test Data
Oil resistance ISO 15372:2000	.1 When tested by the method prescribed below, after exposing the outer surface to oil IRM 901, for 2 h at 20°C ± 2°C, there should be no separation of coating from textile and no residual tackiness when two exposed faces are pressed together. The coating should not smear when rubbed with a single pass of the finger. .2 The test should be carried out not less than 16 h after vulcanization or curing. .3 The apparatus, preparation of specimens and test procedure should be in accordance with ISO 15372:2000/Amd 1:2021, paragraph 6.2.5. Each coated face should be tested.	Was there any separation of coating or residual tackiness YES/NO (Face 1) YES/NO (Face 2) Comments/Observations Passed: _____ Failed: _____

4.3.4.11 Weft Distortion		**Regulations: LSA Code IV/4.2; MSC.81(70) 1/5.17.13.2.2.9**
Test Procedure	Acceptance Criteria	Significant Test Data
Weft Distortion	The weft distortion should be not more than the equivalent of 100 mm maximum over a fabric width of 1.5 m. A line should be drawn across the fabric at right angles to the selvedge. The weft distortion, skew and/or bow should be measured.	Weft distortion _____ mm. Comments/Observations Passed: _____ Failed: _____

Inflatable liferaft materials	Manufacturer: _____ Model: _____ Lot/Serial Number: _____	Date: _____ Time: _____ Surveyor: _____ Organization: _____

4.3.4.12 Resistance to Blocking		**Regulations: LSA Code IV/4.2; MSC.81(70) 1/5.17.13.2.2.10**
Test Procedure	Acceptance Criteria	Significant Test Data
Resistance to Blocking ISO 5978:1990	.1 When tested by the method prescribed below the fabric should exhibit no blocking. .2 The preparation of specimens and test procedure should be in accordance with ISO 5978:1990 except that the duration of time under load should be seven days.	Was the weight lifted? YES/NO Comments/Observations Passed: _____ Failed: _____

Inflatable liferaft materials	Manufacturer: _____ Model: _____ Lot/Serial Number: _____	Date: _____ Time: _____ Surveyor: _____ Organization: _____

4.3.4.13 Hydrolysis Resistance for Thermoplastic Coated Materials only	**Regulations: LSA Code IV/4.2; MSC.81(70) 1/5.17.13.2.2.11**	
Test Procedure	Acceptance Criteria	Significant Test Data
Hydrolysis Resistance for Thermoplastic Coated Materials only	.1 When tested by the methods prescribed below, the following performance values should be achieved: .a Coating adhesion 50 N/50 mm minimum .b Blocking resistance 100 g maximum .c Folding test – No cracks, delamination or visual deterioration .2 The following test requirements apply to fabrics or test specimens, which have been stored for 12 weeks over water in a closed container at 93°C. .3 The following test should be performed after drying the specimens for 1 h at 80°C ±2°C, and conditioning at 20°C ±2°C, 65% RH for 24 h. .4 The coating adhesion of the stored material specimen should be made up and tested in accordance with 4.3.4.5 after the requirements of 4.3.4.13.2 above have been carried out. .5 The blocking resistance should be tested in accordance with 4.3.4.12. .6 Two test samples 100 mm ±2 mm square should be cut from the stored material. The samples should be folded as defined in 4.3.4.6.6.3 and examined for evidence of cracks, ply separation, stickiness or brittleness.	Coating adhesion _____ N/50 mm. Blocking Test: Was the weight lifted? YES/NO Folding Test: Were there any cracks, delamination or visual deterioration after folding test? YES/NO Comments/Observations Passed: _____ Failed: _____

Inflatable liferaft materials	Manufacturer: _____ Model: _____ Lot/Serial Number: _____	Date: _____ Time: _____ Surveyor: _____ Organization: _____

4.3.4.14 Ozone resistance	**Regulations: LSA Code IV/4.2 MSC.81(70) 1/5.17.13.2.2.12**	
Test Procedure	Acceptance Criteria	Significant Test Data
Ozone resistance ISO 3011:1997	.1 When tested by the method prescribed below, no cracks should be visible at a magnification of 5. .2 The preparation of samples and test procedure should be in accordance with specification ISO 3011:1997. The following conditions should apply: .1 Ozone concentration: 50 ppm .2 Temperature: 20°C ±2°C .3 Exposure time: 8 h .4 Mandrel diameter: 6 x sample thickness	Were there any cracks visible at a magnification of 5? YES/ NO Comments/Observations Passed: _____ Failed: _____

Inflatable liferaft materials	Manufacturer: _____ Model: _____ Lot/Serial Number: _____	Date: _____ Time: _____ Surveyor: _____ Organization: _____

4.3.4.15 Tensile Strength (Fabrics used for outer canopies)	**Regulations: LSA Code IV/4.2; MSC.81(70) 1/5.17.13.2.3.1**	
Test Procedure	Acceptance Criteria	Significant Test Data
Tensile Strength	When tested by the method prescribed in 4.3.4.3, the tensile strength should be: Minimum: For warp and weft 930N/50mm of width	Tensile strength: - Warp: _____ N/50 mm Weft: _____ N/50 mm Comments/Observations Passed: _____ Failed: _____

4.3.4.16 Tear Strength (Fabrics used for outer canopies)	**Regulations: LSA Code IV/4.2; MSC.81(70) 1/5.17.13.2.3.2**	
Test Procedure	Acceptance Criteria	Significant Test Data
Tear Strength	When tested by the method prescribed in paragraph 4.3.4.4, the tear strength should be: Minimum: For warp and weft 490 N	Tear strength Warp: _____ N Weft: _____ N Comments/Observations Passed: _____ Failed: _____

Inflatable liferaft materials	Manufacturer: _____ Model: _____ Lot/Serial Number: _____	Date: _____ Time: _____ Surveyor: _____ Organization: _____

4.3.4.17 Low Temperature Flexing (Fabrics used for outer canopies)	**Regulations: LSA Code IV/4.2; MSC.81(70) 1/5.17.13.2.3.3**	
Test Procedure	Acceptance Criteria	Significant Test Data
Low Temperature Flexing	When tested at a temperature not higher than -30°C by the method prescribed in 4.3.4.7, there should be no visible cracking of the sample when inspected under a magnification of 2. The test should be independently applied to each face of the coated fabric.	Was there visible cracking of the sample? YES/NO (Face 1) YES/NO (Face 2) Comments/Observations Passed: _____ Failed: _____

4.3.4.18 Waterproofness (Fabrics used for outer/inner canopies)	**Regulations: LSA Code IV/4.2; MSC.81(70) 1/5.17.13.2.3.4**	
Test Procedure	Acceptance Criteria	Significant Test Data
Waterproofness	.1 When tested by the method prescribed below, no water should pass through the cone within 30 min. The coated fabric should not contain any material that is known to be injurious to a survivor drinking rainwater collected from the canopy. Fabrics may be coated on one or both sides. .2 The test specimen should be cut to a size of 300 mm x 300 mm and tested in accordance with the following procedure: Fold the specimen twice at right angles and open it out into the form of a cone. Secure the cone with a paper clip and insert it into a suitable funnel supported on a flask. Pour 500 ml of water into the cone. Record any penetration of water to the outside of the cone after 30 min.	Did water pass through the cone? YES/NO Comments/Observations Passed: _____ Failed: _____

Inflatable liferaft materials	Manufacturer: _____ Model: _____ Lot/Serial Number: _____	Date: _____ Time: _____ Surveyor: _____ Organization: _____

4.3.4.19 Surface Receptiveness and Adhesion of Surface Coating (Fabrics used for outer canopies)	**Regulations: LSA Code IV/4.2; MSC.81(70) 1/5.17.13.2.3.5**	
Test Procedure	Acceptance Criteria	Significant Test Data
Surface Receptiveness and Adhesion of Surface	When tested by the method prescribed in 4.3.4.5, the surface receptiveness on either face should not be less than 25N/50 mm width surface. For coating adhesion, a minimum of 25N/50 mm is required.	Surface receptiveness on each face? YES/ NO Face 1: _____ N/50 mm Face 2: _____ N/50 mm Coating adhesion: _____ N/50 mm Comments/Observations Passed: _____ Failed: _____

4.3.4.20 Colour (Fabrics used for outer canopies)	**Regulations: LSA Code IV/4.2; MSC.81(70) 1/5.17.13.2.3.6**	
Test Procedure	Acceptance Criteria	Significant Test Data
Colour	The liferaft canopy should be evaluated after the mooring out test in 4.18 or an equivalent method using artificial light to determine whether the coating is sufficiently colour fast.	Reference should be made to mooring out test. Comments/Observations: Passed: _____ Failed: _____

Inflatable liferaft materials	Manufacturer: _____ Model: _____ Lot/Serial Number: _____	Date: _____ Time: _____ Surveyor: _____ Organization: _____

4.3.4.21 Effects of Ageing (Fabrics used for outer canopies)	**Regulations: LSA Code IV/4.2; MSC.81(70) 1/5.17.13.2.3.7**	
Test Procedure	Acceptance Criteria	Significant Test Data
Effects of Ageing	.1 Folding Test – when tested by the method prescribed in 4.3.4.6.1 there should be no cracks, separation of plies or brittleness visible when the samples are inspected under a magnification of 2. .2 Tensile Test – when tested by the method prescribed in 4.3.4.6.2 at least 90% of the original tensile strength should be retained in both warp and weft direction.	Were there any cracks, separation of plies or brittleness visible? YES/ NO Tensile strength after ageing: ____ % Warp _____ % Weft Comments/Observations Passed: _____ Failed: _____

4.3.4.22 Tensile Strength (Fabrics used for inner canopies)	**Regulations: LSA Code IV/4.2; MSC.81(70) 1/5.17.13.2.4.1**	
Test Procedure	Acceptance Criteria	Significant Test Data
Tensile Strength	When tested by the method prescribed in 4.3.4.3 should be: - Minimum: Warp and weft 100N/50 mm of width	Tensile strength Warp: _____ N/50 mm Weft: _____ N/50 mm Comments/Observations Passed: _____ Failed: _____

Inflatable liferaft materials	Manufacturer: _____ Model: _____ Lot/Serial Number: _____	Date: _____ Time: _____ Surveyor: _____ Organization: _____

4.3.4.23 Porosity (Fabrics used for inner canopies)	**Regulations: LSA Code IV/4.2; MSC.81(70) 1/5.17.13.2.4.2**	
Test Procedure	Acceptance Criteria	Significant Test Data
	As the inner canopy serves as a barrier to provide a static layer of air, it should either be of a close weave construction or have a low porosity to air.	Comments/Observations Passed: _____ Failed: _____

4.3.5 SEARCHLIGHTS FOR LIFEBOATS AND RESCUE BOATS EVALUATION AND TEST REPORT

4.3.5.0 General information
- 4.3.5.0.1 General data and specifications
- 4.3.5.0.2 Submitted drawings, reports and documents
- 4.3.5.0.3 Quality assurance

4.3.5.1 Visual Inspection
- 4.3.5.1.1 Approval marking
- 4.3.5.1.2 Expiry Marking
- 4.3.5.1.3 Additional Markings
- 4.3.5.1.4 Electrical short circuit protection
- 4.3.5.1.5 Construction and materials
- 4.3.5.1.6 Operational Controls

4.3.5.2 Temperature tests

4.3.5.3 Vibration test

4.3.5.4 Corrosion and rain test

4.3.5.5 Interference tests

4.3.5.6 Power supply test

4.3.5.7 Light tests

4.3.5 SEARCHLIGHTS FOR LIFEBOATS AND RESCUE BOATS EVALUATION AND TEST REPORT

Manufacturer	
Type	
Date	
Place	
Name Surveyor printed	
Signature	
Approving Organization	

Searchlights for lifeboats and rescue boats	Manufacturer: _____ Model: _____ Lot/Serial Number: _____	Date: _____ Time: _____ Surveyor: _____ Organization: _____

4.3.5.0.1 General data and specifications		**Regulations: LSA Code/Res. MSC.81(70)**
General Information	**Search Light Dimensions**	**Search Light Weight**

Searchlights for lifeboats and rescue boats	Manufacturer: _____ Model: _____ Lot/Serial Number: _____	Date: _____ Time: _____ Surveyor: _____ Organization: _____

4.3.5.0.2 Submitted drawings, reports and documents

Submitted drawings and documents			**Status**
Drawing No.	**Revision No. & date**	**Title of drawing**	

Submitted reports and documents			**Status**
Report/Document No.	**Revision No. & date**	**Title of report/document**	
		Maintenance Manual -	
		Operations Manual -	

Searchlights for lifeboats and rescue boats	Manufacturer: _____ Model: _____ Lot/Serial Number: _____	Date: _____ Time: _____ Surveyor: _____ Organization: _____

4.3.5.0.3 Quality assurance	**Regulations: MSC.81(70)2/1.1,1.2**
Except where all appliances of a particular type are required by chapter III of the International Convention for the Safety of Life at Sea, 1974, as amended, or the International Life-Saving Appliance (LSA) Code to be inspected, representatives of the Administration should make random inspections of manufacturers to ensure that the quality of life-saving appliances and materials used comply with the specification of the approved prototype life-saving appliance. Manufacturers should be required to institute a quality control procedure to ensure that life-saving appliances are produced to the same standard as the prototype life-saving appliance approved by the Administration and to keep records of any production tests carried out in accordance with the Administration's instructions.	Quality assurance Standard Used: _____ Quality assurance Procedure: _____ Quality assurance Manual: _____ Description of System: Quality assurance System acceptable? Yes/No Comments/Observations:

Searchlights for lifeboats and rescue boats	Manufacturer: _____ Model: _____	Date: _____ Time: _____ Surveyor: _____

	Lot/Serial Number: _____	Organization: _____

4.3.5.1 Visual Inspection	**Regulations: LSA Code 1.2.2.1/1.2.2.9/1.2.2.10/1.2.3/4.4.6.11; MSC.81(70) 1/ 13.1/13.3**	
Test Procedure	Acceptance Criteria	Significant Test Data
One search light should be examined in detail for the following items: Approval marking Manufacturer's label Additional markings Electrical short circuit protection	The search light should: .1 be clearly marked with approval information including the Administration which approved it, and any operational restrictions; .2 be marked with the voltage and power consumption; .3 provide the following information: - serial number; - identification of the manufacturer; - easily understandable symbols for on/off switching; and - where applicable, information on proper battery disposal by the words: "DO NOT INCINERATE/ DO NOT RECHARGE/DO NOT TAMPER"; and .4 where applicable, be provided with electrical short circuit protection to prevent damage or injury.	Passed: _____ Failed: _____ Passed: _____ Failed: _____ Passed: _____ Failed: _____ Passed: _____ Failed: _____ Comments/Observations

Searchlights for lifeboats and rescue boats	Manufacturer: _____ Model: _____ Lot/Serial Number: _____	Date: _____ Time: _____ Surveyor: _____ Organization: _____

4.3.5.1 Visual Inspection (continued)	**Regulations: LSA Code 1.2.2.1/1.2.2.9/1.2.2.10/1.2.3/4.4.6.11; MSC.81(70) 1 13.1/13.3**	
Test Procedure	Acceptance Criteria	Significant Test Data
Construction and materials	Search lights should: .1 be constructed with proper workmanship and materials and in such a way that the accumulation of condensed water in hazardous quantities is avoided;	Passed: _____ Failed: _____
	.2 be designed in such a way that the illuminant is safely fitted in the search light without using screwed sockets and can easily be replaced also in darkness;	Passed: _____ Failed: _____
	.3 be made of non-magnetic material;	Passed: _____ Failed: _____
	.4 be constructed to avoid accidental access to dangerous voltages;	Passed: _____ Failed: _____
	.5 be constructed in such a way that outer parts do not reach temperatures during operation which restrict their manual use; and	Passed: _____ Failed: _____
Operational controls	.6 have operational controls in compliance with A.694(17) paragraph 3, IEC 60447:2004, and IEC 60945:2002 paragraphs 4.2.1.2, 4.2.1.3 and 4.2.1.4.	Passed: _____ Failed: _____
After having passed the visual inspection the searchlight should be subjected next to the temperature tests.		Comments/Observations

Searchlights for lifeboats and rescue boats	Manufacturer: _____ Model: _____ Lot/Serial Number: _____	Date: _____ Time: _____ Surveyor: _____ Organization: _____

4.3.5.2 Temperature Tests	**Regulations: LSA Code I/1.2.2.1, 1.2.2.2; MSC.81(70) 1/ 13.2/13.2.1**	
Test Procedure	Acceptance Criteria	Significant Test Data
The search light which has passed the visual inspection should be subjected to a dry heat test according to IEC 60945:2002, paragraph 8.2, followed by a damp heat test (8.3), a low temperature test (8.4), and thermal shock (8.5). After having passed the temperature tests the searchlight should be subjected next to the vibration test.	The searchlight should not be damaged in stowage throughout the air temperature range of -30° to +65°C. After these tests, the search light should show no sign of damage such as shrinking, cracking, swelling, dissolution or change of mechanical qualities and should be capable of being operated.	Results: Comments/Observations Passed: _____ Failed: _____

4.3.5.3 Vibration Test	**Regulations: LSA Code I/1.2.2.1, 1.2.2.8; MSC.81(70) 1/13.2/13.2.2**	
Test Procedure	Acceptance Criteria	Significant Test Data
The searchlight, which has passed the temperature tests, should be subjected to a vibration test according to IEC 60945:2002, paragraph 8.7. After having passed the vibration test the searchlight should be subjected next to the corrosion and rain test.	The searchlight should be constructed with proper workmanship and materials. The searchlight should function after the test.	Results: Comments/Observations Passed: _____ Failed: _____

Searchlights for lifeboats and rescue boats	Manufacturer: _____ Model: _____ Lot/Serial Number: _____	Date: _____ Time: _____ Surveyor: _____ Organization: _____

4.3.5.4 Corrosion and Rain Test		**Regulations: LSA Code 1.2.2.1/1.2.2.4; MSC.81(70) 1/ 13.2/13.2.3**
Test Procedure	Acceptance Criteria	Significant Test Data
The search light which has passed the vibration test should, where applicable, be subjected to a corrosion test according to IEC 60945:2002, paragraph 8.12, and a rain test according to IEC 60945:2002, paragraph 8.8. After having passed the corrosion and rain test the searchlight should be subjected next to the interference test.	The searchlight should be constructed with proper workmanship and materials, and, where applicable, be rot-proof, corrosion resistant and not be unduly affected by seawater. After the tests, the searchlight should show no sign of damage and should be capable of being operated.	Results: Comments/Observations Passed: _____ Failed: _____

4.3.5.5 Interference Test		**Regulations: MSC.81(70) 1/ 13.2/13.2.4;**
Test Procedure	Acceptance Criteria	Significant Test Data
The search light which has passed the corrosion and rain test should be subjected to the interference test for unwanted electromagnetic emission according to resolution A. 694(17) and IEC 60945:2002, paragraph 9. After having passed the interference test the searchlight should be subjected next to the power supply test.	The search light should not radiate unwanted electromagnetic emission according to IEC 60945:2002, paragraph 9 to ensure electromagnetic compatibility between search light and other radiocommunication and navigational equipment carried on board.	Results: Comments/Observations Passed: _____ Failed: _____

Searchlights for lifeboats and rescue boats	Manufacturer: _____ Model: _____ Lot/Serial Number: _____	Date: _____ Time: _____ Surveyor: _____ Organization: _____

4.3.5.6 Power Supply Test		**Regulations: MSC.81(70) 1/ 13.2/13.2.5**
Test Procedure	Acceptance Criteria	Significant Test Data
The searchlight, which has passed the interference test, should be subjected to the power supply test. The search light should be operated with 12 V or 24 V and should be tested for extreme power supply according to resolution A. 694(17) and IEC 60945:2002, paragraph 7.1 and excessive conditions according to paragraph 7.2. After having passed the power supply test the searchlight should be subjected next to the light tests.	The search light should continue to operate also in the presence of variations of the power supply according to IEC 60945:2002, paragraphs 7.1 and 7.2. Means should be incorporated for the protection of the search light from the effects of excessive current and voltage, transient and accidental reversal of power supply polarity or phase sequence according to IEC 60945:2002, paragraph 7.2. If provision is made for operating the search light from more than one source of electrical energy, arrangements for rapidly changing from one source to the other should be provided but not necessarily incorporated in the searchlight.	Results: Comments/Observations Passed: _____ Failed: _____

Searchlights for lifeboats and rescue boats	Manufacturer: _____ Model: _____ Lot/Serial Number: _____	Date: _____ Time: _____ Surveyor: _____ Organization: _____

4.3.5.7 Light Tests	**Regulations: LSA Code 4.4.8.29/5.1.2.2.11; MSC.81(70) 1/ 10.4.9/13.4/13.4.1/13.4.2**	
Test Procedure	Acceptance Criteria	Significant Test Data
The searchlight, which has passed the power supply test, should be subjected to light tests. The voltage of the test unit should be monitored continuously for the specific time. To make sure that the test unit provides a light distribution and a luminous intensity of not less than the specified luminous intensity after the specified time of operation, the following test should be performed: It must be demonstrated that the light reaches the light distribution and the required luminous intensity when using a photometer which is calibrated to the photometric standards of the appropriate National or State Standard Institute (Note: CIE Publ. No. 70 contains further information). Luminous intensity should be measured by a photometer directed at the center of the light source with the test light on a rotating table. Luminous intensity should be measured in a horizontal direction at the level of the center of the light source and continuously recorded through a 360° rotation. These measurements should be taken in the azimuth angle at 0.5° intervals above the horizon up to 3°. Luminous intensity should be measured in a vertical direction, beginning at the center of the light source at the point of lowest recorded light output, and continuously recorded through an arc of 6°.	The luminous intensity of the searchlight should be at least 2.5 x 10^3 cd. The axial luminous intensity should be at least 90% of the maximum luminous intensity. The luminous intensity should be at a maximum in the center of the luminous intensity distribution. A homogenous luminous intensity distribution should be ensured. The effective light emission sector should be circular and reach vertically and horizontally at least 6°. The searchlight should be suitable for a permanent operation of not less than 3 h. During this period the requirements of light distribution and luminous intensity should be fulfilled.	Results: All measured data of luminous intensity and voltage should be documented. Comments/Observations Passed: _____ Failed: _____

4.3.6 SURVIVAL CRAFT POSITION INDICATING LIGHTS EVALUATION AND TEST REPORT

Definitions:
Survival craft lights are liferaft lights and lifeboat lights.
Survival craft exterior lights are liferaft exterior lights (liferaft canopy lights) and lifeboat exterior lights (lifeboat enclosure lights or lifeboat cover lights).
Survival craft interior lights are liferaft interior lights and lifeboat interior lights.

Remark:

Rescue boat exterior lights should be treated as lifeboat exterior lights.

4.3.6.0 General information
- 4.3.6.0.1 General data and specifications
- 4.3.6.0.2 Submitted drawings, reports and documents
- 4.3.6.0.3 Quality assurance

4.3.6.1 Visual inspection
- 4.3.6.1.1 Approval marking
- 4.3.6.1.2 Expiry marking
- 4.3.6.1.3 Additional markings
- 4.3.6.1.4 Electrical short circuit protection
- 4.3.6.1.5 Construction and materials
- 4.3.6.1.6 Fitting
- 4.3.6.1.7 Lights

4.3.6.2 Temperature cycling test

4.3.6.3 Light tests

4.3.6.4 Chromaticity test

4.3.6.5 Switch arrangement test

4.3.6.6 Vibration test

4.3.6.7 Mould growth test

4.3.6.8 Corrosion and seawater resistance test

4.3.6.9 Solar radiation test (not for survival craft interior lights)

4.3.6.10 Test for oil resistance (not for survival craft interior lights)

4.3.6.11 Rain test and watertightness test

4.3.6.12 Fire test (not for survival craft interior lights)

4.3.6 SURVIVAL CRAFT POSITION INDICATING LIGHTS EVALUATION AND TEST REPORT

Manufacturer	
Date	
Type	
Place	
Name Surveyor printed	
Signature	
Approving Organization	

Survival craft position indicating lights	Manufacturer: _____ Model: _____ Lot/Serial Number: _____	Date: _____ Time: _____ Surveyor: _____ Organization: _____

4.3.6.0.1 General data and specifications	**Regulations: LSA Code/Res. MSC.81(70)**	
General Information	Survival Craft Light Dimensions	Survival Craft Light Weight
TYPE OF SWITCHING: Automatic/Manual FLASHING LIGHT or STEADY LIGHT		Comments/Observations

Survival craft position indicating lights	Manufacturer: _____ Model: _____ Lot/Serial Number: _____	Date: _____ Time: _____ Surveyor: _____ Organization: _____

4.3.6.0.2 Submitted drawings, reports and documents

Submitted drawings and documents			**Status**
Drawing No.	**Revision No. & date**	**Title of drawing**	

Submitted reports and documents			**Status**
Report/Document No.	**Revision No. & Date**	**Title of report/document**	
		Maintenance Manual -	
		Operations Manual -	

Survival craft position indicating lights	Manufacturer: _____ Model: _____ Lot/Serial Number: _____	Date: _____ Time: _____ Surveyor: _____ Organization: _____

4.3.6.0.3 Quality assurance	**Regulations: - MSC.81(70)2/1.1,1.2**
Except where all appliances of a particular type are required by chapter III of the International Convention for the Safety of Life at Sea, 1974, as amended, or the International Life-Saving Appliance (LSA) Code to be inspected, representatives of the Administration should make random inspections of manufacturers to ensure that the quality of life-saving appliances and materials used comply with the specification of the approved prototype life-saving appliance. Manufacturers should be required to institute a quality control procedure to ensure that life-saving appliances are produced to the same standard as the prototype life-saving appliance approved by the Administration and to keep records of any production tests carried out in accordance with the Administration's instructions.	Quality assurance Standard Used: _____ Quality assurance Procedure: _____ Quality assurance Manual: _____ Description of System: Quality assurance System acceptable? Yes/No Comments/Observations:

Survival craft position indicating lights	Manufacturer: _____ Model: _____ Lot/Serial Number: _____	Date: _____ Time: _____ Surveyor: _____ Organization: _____

4.3.6.1 Visual Inspection	**Regulations: LSA Code 1.2.2.1/1.2.2.9/1.2.2.10/1.2.3/4.1.3.4/4.4.7.11**	
Test Procedure	Acceptance Criteria	Significant Test Data
Nineteen survival craft exterior or sixteen interior lights (as the case may be) should be detailed examined for the following items:		Results:
Approval marking	The survival craft lights should be clearly marked with approval information including the Administration which approved it, and any operational restrictions;	Approval marking: PASS/FAIL
Expiry marking	Be marked with the date of expiry; the Administration should determine the period of acceptability, due to deterioration with age. The established life must be justified by the manufacturer.	Expiry marking: PASS/FAIL
Additional markings	Provide the following information: .1 precise definition of intended use (e.g. "Exterior light for inflatable liferafts"); .2 serial number; .3 identification of the manufacturer; .4 easily understandable symbols for on/off switching; and .5 where applicable, information on proper battery disposal by the words: "DO NOT INCINERATE/DO NOT RECHARGE/DO NOT TAMPER".	Additional marking: PASS/FAIL Comments/Observations

Survival craft position indicating lights	Manufacturer: _____ Model: _____ Lot/Serial Number: _____	Date: _____ Time: _____ Surveyor: _____ Organization: _____

4.3.6.1 Visual Inspection (continued)	**Regulations: LSA Code 1.2.2.1/1.2.2.9/1.2.2.10/1.2.3/4.1.3.4/4.4.7.11**	
Test Procedure	Acceptance Criteria	Significant Test Data
Nineteen survival craft exterior or sixteen interior lights (as the case may be) should be detailed examined for the following items (continued):		Results:
Electrical short circuit protection	The survival craft lights should be provided with electrical short circuit protection to prevent damage or injury;	Short circuit protection: PASS/FAIL
Construction and materials	Be constructed with proper workmanship and materials.	Construction: PASS/FAIL
Fitting	Survival craft interior lights should: .1 be fitted inside the survival craft; and .2 be fitted to the top of the survival craft to ensure a light emission in all directions of the upper hemisphere.	Fitting: PASS/FAIL
Lights	Should only be electric lights.	Lights: PASS/FAIL Comments/Observations

SURVIVAL CRAFT INTERNAL AND EXTERNAL LIGHTS FLOWCHART

Temperature Cycling (12 internal and 12 external lights in groups of 4) 4.3.6.2:

lights 1 through 4:	Light test (hot) 4.3.6.3
lights 5 through 8:	light test (cold) 4.3.6.3
lights 9 through 12:	light test (ambient) 4.3.6.3

Any one of the 12 external lights that has passed the Light test - Chromaticity Test 4.3.6.4

Visual Inspection (all 19 external lights and 16 internal lights) 4.3.6.1

Light 13 (Internal and External) – Switch arrangement test 4.3.6.5 — same lights subjected to Vibration test 4.3.6.6

Light 14 (Internal and External) - 28 day mould growth test (may be waived) 4.3.6.7

Light 15 (Internal and External) - Corrosion and seawater resistance test (may be waived) 4.3.6.8

Light 16 (External Light Only) - Solar Radiation (may be waived) 4.3.6.9

Light 17 (External Light only) - Oil resistance test 4.3.6.10

Light 18 (External Light and Light 16 Internal Light) - rain test and watertightness test 4.3.6.11

Light 19 (External Light only)– fire test 4.3.6.12

Survival craft position indicating lights	Manufacturer: _____ Model: _____ Lot/Serial Number: _____	Date: _____ Time: _____ Surveyor: _____ Organization: _____

4.3.6.2 Temperature cycling test	**Regulations: LSA Code 1.2.2.2; MSC.81(70) 1/ 1.2/1.2.1/1.2.2/10.1/10.1.1**	
Test Procedure	Acceptance Criteria	Significant Test Data
Twelve survival craft exterior or interior lights (as the case may be) which have passed the visual inspection should be subjected to temperature cycling. The following test should be carried out on 12 survival craft lights: The survival craft lights should be alternately subjected to surrounding temperatures of not less than -30°C and +65°C. These alternating cycles need not follow immediately after each other and the following procedure, repeated for a total of not less than 10 cycles, is acceptable: .1 at least an 8 h exposure at a minimum temperature of +65°C to be completed in one day; and .2 the specimens removed from the warm chamber that same day and left exposed under ordinary room conditions at a temperature of 20°C ±3°C until the next day; .3 at least an 8 h exposure at a maximum temperature of -30°C to be completed the next day; and .4 the specimens removed from the cold chamber that same day and left exposed under ordinary room conditions at a temperature of 20°C ±3°C until the next day.	The survival craft lights should not be damaged in stowage throughout the air temperature range of -30°C to +65°C. The survival craft lights should show no sign of loss of rigidity under high temperatures and, after the tests, should show no sign of damage such as shrinking, cracking, swelling, dissolution or change of mechanical qualities and should function after the test.	Results: Attach temperature cycling chart to record times spent at each temperature PASS/FAIL Comments/Observations

Survival craft position indicating lights	Manufacturer: _____ Model: _____ Lot/Serial Number: _____	Date: _____ Time: _____ Surveyor: _____ Organization: _____

4.3.6.2 Temperature cycling test (continued)	**Regulations: LSA Code 1.2.2.2; MSC.81(70) 1/ 1.2/1.2.1/1.2.2/10.1/10.1.1**	
Test Procedure	Acceptance Criteria	Significant Test Data
If the lifeboat enclosure light, lifeboat cover light or lifeboat interior light is connected to the lifeboat's electrical network and can be supplied with electrical power from any of the lifeboat's batteries as well as from the lifeboat's engine-driven generator set, the light should only be subjected to the test as far as practicable. After having passed the temperature cycling test the lights should be subjected next to the light tests.		Comments/Observations

Survival craft position indicating lights	Manufacturer: _____ Model: _____ Lot/Serial Number: _____	Date: _____ Time: _____ Surveyor: _____ Organization: _____

4.3.6.2 Temperature cycling test – Test data			**Regulations: LSA Code 1.2.2.2; MSC.81(70) 1/ 1.2/1.2.1/1.2.2/10.1/10.1.1**	
	HOT CYCLE		**COLD CYCLE**	
Cycle 1	Date In: Time In: Temperature: ____°C	Date Out: Time Out: Temperature: ____°C	Date In: Time In: Temperature: ____°C	Date Out: Time Out: Temperature: ____°C
Cycle 2	Date In: Time In: Temperature: ____°C	Date Out: Time Out: Temperature: ____°C	Date In: Time In: Temperature: ____°C	Date Out: Time Out: Temperature: ____°C
Cycle 3	Date In: Time In: Temperature: ____°C	Date Out: Time Out: Temperature: ____°C	Date In: Time In: Temperature: ____°C	Date Out: Time Out: Temperature: ____°C
Cycle 4	Date In: Time In: Temperature: ____°C	Date Out: Time Out: Temperature: ____°C	Date In: Time In: Temperature: ____°C	Date Out: Time Out: Temperature: ____°C
Cycle 5	Date In: Time In: Temperature: ____°C	Date Out: Time Out: Temperature: ____°C	Date In: Time In: Temperature: ____°C	Date Out: Time Out: Temperature: ____°C
Cycle 6	Date In: Time In: Temperature: ____°C	Date Out: Time Out: Temperature: ____°C	Date In: Time In: Temperature: ____°C	Date Out: Time Out: Temperature: ____°C
Cycle 7	Date In: Time In: Temperature: ____°C	Date Out: Time Out: Temperature: ____°C	Date In: Time In: Temperature: ____°C	Date Out: Time Out: Temperature: ____°C
Cycle 8	Date In: Time In: Temperature: ____°C	Date Out: Time Out: Temperature: ____°C	Date In: Time In: Temperature: ____°C	Date Out: Time Out: Temperature: ____°C
Cycle 9	Date In: Time In: Temperature: ____°C	Date Out: Time Out: Temperature: ____°C	Date In: Time In: Temperature: ____°C	Date Out: Time Out: Temperature: ____°C
Cycle 10	Date In: Time In: Temperature: ____°C	Date Out: Time Out: Temperature: ____°C	Date In: Time In: Temperature: ____°C	Date Out: Time Out: Temperature: ____°C

Survival craft position indicating lights	Manufacturer: _____ Model: _____ Lot/Serial Number: _____	Date: _____ Time: _____ Surveyor: _____ Organization: _____

4.3.6.3 Light tests	**Regulations: LSA Code 4.1.3.3/4.1.3.4/4.4.7.10/4.4.7.11/5.1.1.1; MSC.81(70) 1/10.1.2, 10.1.3, 10.1.4, 10.4, 10.4.9**	
Test Procedure	Acceptance Criteria	Significant Test Data
In the case of seawater cell power sources, four survival craft lights which have passed the temperature cycling test should be taken from a stowage temperature of -30°C and be operated immersed in seawater at a temperature of -1°C; four survival craft lights which have passed the temperature cycling test should be taken from a stowage temperature of +65°C and be operated immersed in seawater at a temperature of +30°C; and four survival craft lights which have passed the temperature cycling test should be taken from ordinary room conditions and be operated immersed in fresh water at ambient temperature. In the case of dry cell power sources, provided that they will not come into contact with seawater, four survival craft lights which have passed the temperature cycling test should be operated at an air temperature of -30°C, four survival craft lights which have passed the temperature cycling test should be operated at an air temperature of +65°C, and four survival craft lights which have passed the temperature cycling test should be operated at ambient temperature. If the voltage at 5 min of operation is lower than the recorded voltage at the end of life it is permissible to use a lamp from the same build standard for the light output test.	Survival craft lights should continue to provide a luminous intensity of not less than 4.3 cd in all directions of the upper hemisphere for a period of not less than 12 h. In the case of a flashing light, it should be established that the rate of flashing for the 12 h operative period is not less than 50 flashes and not more than 70 flashes per minute and that the effective luminous intensity is at least 4.3 cd in all directions of the upper hemisphere. (See formula below to calculate the effective luminous intensity). The interior lights should provide an arithmetic mean luminous intensity of not less than 0.5 cd when measured over the entire upper hemisphere to permit reading of survival instructions and equipment instructions for a period of not less than 12 h.	Results: All luminous intensity data is to be attached here. PASS/ FAIL Results: PASS/FAIL: Comments/Observations

Survival craft position indicating lights	Manufacturer: _____ Model: _____ Lot/Serial Number: _____	Date: _____ Time: _____ Surveyor: _____ Organization: _____

4.3.6.3 Light tests (continued)	**Regulations: LSA Code 4.1.3.3/4.1.3.4/4.4.7.10/4.4.7.11/5.1.1.1; MSC.81(70) 1/10.1.2, 10.1.3, 10.1.4, 10.4, 10.4.9**	
Test Procedure	Acceptance Criteria	Significant Test Data
Using the lowest recorded voltage, a light output test can be carried out as described below. The voltage of the 12 test units should be monitored continuously for 12 h. To make sure that all these test units provide a luminous intensity of not less than 4.3 cd in all directions of the upper hemisphere for 12 h operation, the following test should be performed: It must be demonstrated that at least one light from each of the specified temperature ranges reaches the required luminous intensity in all directions of the upper hemisphere when using a photometer which is calibrated to the photometric standards of the appropriate National or State Standard Institute (Note: CIE Publ. No. 70 contains further information.). The lowest voltage light of the cold temperature test sample lot, the highest voltage light of the high temperature test sample lot and the mean voltage light of the ambient temperature sample lot should be selected. These three lights must be used for the light output tests. In the event that a lamp filament burns out during the light output test, a second light from the same performance test lot may be used. Luminous intensity should be measured by a photometer directed at the center of the light source with the test light on a rotating table.	The effective luminous intensity is to be found from the formula: $$\left(\frac{\int_{t_1}^{t_2} I dt}{0.2 + (t_2 - t_1)}\right)_{max}$$ where: I is the instantaneous intensity, 0.2 is the Blondel-Rey constant and t_1 and t_2 are time limits of integration in seconds. Flashing lights with a flash duration of not less than 0.3 s may be considered as fixed/steady lights for the measurement of their luminous intensity. Such lights should provide the required luminous intensity in all directions of the upper hemisphere. The time interval between switching on and reaching the required luminous intensity (incandescence time) and all time spent below the required luminous intensity when the light switches off should be disregarded (see figure 10.4.1.)	Comments/Observations

Survival craft position indicating lights	Manufacturer: _____ Model: _____ Lot/Serial Number: _____	Date: _____ Time: _____ Surveyor: _____ Organization: _____

4.3.6.3 Light tests (continued)	**Regulations: LSA Code 4.1.3.3/4.1.3.4/4.4.7.10/4.4.7.11/5.1.1.1; MSC.81(70) 1/10.1.2, 10.1.3, 10.1.4, 10.4, 10.4.9**	
Test Procedure	Acceptance Criteria	Significant Test Data
Luminous intensity should be measured in a horizontal direction at the level of center of the light source and continuously recorded through a 360° rotation. The first measurements should be taken at 0° (horizontal) and should continue to be taken in the azimuth angle at 5° intervals to a single measurement at 90° (vertical). Luminous intensity should be measured in a vertical direction, beginning at the center of the light source at the point of lowest recorded light output, and continuously recorded through an arc of 180°. All measured data of luminous intensity and voltage should be documented. After having passed the light tests, one external light should be subjected next to the chromaticity test.		Comments/Observations

Survival craft position indicating lights	Manufacturer: _____ Model: _____ Lot/Serial Number: _____	Date: _____ Time: _____ Surveyor: _____ Organization: _____

4.3.6.4 Chromaticity test	**Regulations: LSA Code 4.1.3.3/4.1.3.4/4.4.7.10/4.4.7.11/5.1.1.1; MSC.81(70) 1/10.4/10.4.10**	
Test Procedure	Acceptance Criteria	Significant Test Data
One external light which has passed the light tests should be tested for chromaticity to determine that it lies within the boundaries of the area "white" of the diagram specified for each colour by the International Commission on Illumination (CIE). The chromaticities of the survival craft lights should be measured by means of colorimetric measurement equipment which is calibrated to the appropriate National or State Standards Institute (Note: CIE Publ. No. 15.2 contains further information). Measurement on at least four points of the upper hemisphere should be taken.	The measured chromaticity coordinates should fall within the boundaries of the area of the diagram as per CIE. The boundaries of the area for white lights are given by the following corner coordinates: x 0.500 0.500 0.440 0.300 0.300 0.440 y 0.382 0.440 0.433 0.344 0.278 0.382 (International Standard on Colours of Light Signals, with colour tables to be developed by CIE.)	Results: All chromaticity data is to be attached here. PASS/FAIL Comments/Observations

4.3.6.5 Switch arrangement test	**Regulations: LSA Code 4.1.3.3/4.1.3.4/4.4.7.10/4.4.7.11/5.1.1.1; MSC.81(70) 1/10.4/10.4.3**	
Test Procedure	Acceptance Criteria	Significant Test Data
One survival craft exterior or interior light (as the case may be) which has passed the visual inspection should be subjected to the switch arrangement test. A test person, wearing immersion suit gloves, must be able to switch the survival craft light in its normal operational position on and off three times. After having passed the switch arrangement test the light should be subjected next to the vibration test.	The survival craft exterior or interior light (as the case may be) must function properly.	Results: PASS/ FAIL Comments/Observations

Survival craft position indicating lights	Manufacturer: _____ Model: _____ Lot/Serial Number: _____	Date: _____ Time: _____ Surveyor: _____ Organization: _____

4.3.6.6 Vibration test	**Regulations: LSA Code 1.2.2.1/1.2.2.8; MSC.81(70) 1/10.4/10.4.1**	
Test Procedure	Acceptance Criteria	Significant Test Data
The survival craft exterior or interior light (as the case may be) which has passed the switch arrangement test should be subjected to a vibration test according to IEC 60945:2002, paragraph 8.7.	The survival craft light should be constructed with proper workmanship and materials, The survival craft light should function after the test.	Results: PASS/FAIL Comments/Observations

4.3.6.7 Mould growth test	**Regulations: LSA Code 1.2.2.4; MSC.81(70) 1/10.4/10.4.2**	
Test Procedure	Acceptance Criteria	Significant Test Data
One survival craft exterior or interior light (as the case may be) which has passed the visual inspection should be subjected to the mould growth test. The survival craft light should be inoculated by spraying with an aqueous suspension of mould spores containing all the following cultures: Aspergillus niger; Aspergillus terreus; Aureobasidium pullulans; Paecilomyces variotii; Penicillium funiculosum; Penicillium ochro- chloron; Scopulariopsis brevicaulis; and Trichoderma viride. The survival craft light should then be placed in a mould growth chamber which should be maintained at a temperature of 29°C +/- 1°C and a relative humidity of not less than 95%. The period of incubation should be 28 days. After this period the survival craft light should be inspected. (Note: The mould growth test may be waived where the manufacturer is able to produce evidence that the external materials employed will satisfy the test.)	The survival craft light should be rot-proof and not be unduly affected by fungal attack. There should be no mould growth visible to the naked eye and the survival craft light should function after the test.	Results: PASS/ FAIL Comments/Observations

Survival craft position indicating lights	Manufacturer: _____ Model: _____ Lot/Serial Number: _____	Date: _____ Time: _____ Surveyor: _____ Organization: _____

4.3.6.8 Corrosion and seawater resistance test	**Regulations: LSA Code 1.2.2.4/4.1.3.3/4.1.3.4; MSC.81(70) 1/10.4/10.4.4**	
Test Procedure	Acceptance Criteria	Significant Test Data
One survival craft exterior or interior light (as the case may be) which has passed the visual inspection should be subjected to a corrosion and seawater resistance test according to IEC 60945:2002, paragraph 8.12. Note: .1 If there are no exposed metal parts the Corrosion and Seawater Resistance Test need not be conducted. .2 The Corrosion and Seawater Resistance Test may be waived where the Manufacturer is able to produce evidence that the external metal parts employed will satisfy the test. .3 Automatic activated version should be prevented from switching during the test.	The survival craft light should be corrosion resistant and not be unduly affected by seawater. In a stowed condition, batteries should be of a type that does not deteriorate due to dampness or humidity. Furthermore, the survival craft light should comply with the requirements of IEC 60945:2002, paragraph 8.12.2. There should be no undue deterioration of metal parts and the survival craft light should function after the test. Where the exposed metal is part of the automatic switch sensor, the function test after the 28-day test cannot be done.	Results: PASS/ FAIL Comments/Observations

Survival craft position indicating lights	Manufacturer: _____ Model: _____ Lot/Serial Number: _____	Date: _____ Time: _____ Surveyor: _____ Organization: _____

4.3.6.9 Solar radiation test (not for survival craft interior lights)	**Regulations: LSA Code 1.2.2.5; MSC.81(70) 1/10.4/10.4.5**	
Test Procedure	Acceptance Criteria	Significant Test Data
One survival craft exterior light which has passed the visual inspection should be subjected to a solar radiation test according to IEC 60945:2002, paragraph 8.10. (Note: The Solar Radiation Test may be waived where the manufacturer is able to produce evidence that the materials employed will satisfy the test, i.e. UV stabilized.)	The survival craft exterior light should be resistant to deterioration by sunlight. Furthermore, the mechanical properties and labels should be resistant to harmful deterioration by sunlight and the survival craft exterior light should function after the test.	Results: PASS/FAIL Comments/Observations

4.3.6.10 Test for oil resistance (not for survival craft interior lights)	**Regulations: LSA Code 1.2.2.4; MSC.81(70) 1/ 10.4/10.4.6**	
Test Procedure	Acceptance Criteria	Significant Test Data
One survival craft exterior light which has passed the visual inspection should be subjected to the test for oil resistance according to IEC 60945:2002, paragraph 8.11. Automatic activated version should be prevented from switching during the test.	After this test the survival craft exterior light should not be unduly affected by oil and should show no sign of damage such as shrinking, cracking, swelling, dissolution or change of mechanical qualities. The survival craft exterior light should function after the test.	Results: PASS/ FAIL Comments/Observations

Survival craft position indicating lights	Manufacturer: _____ Model: _____ Lot/Serial Number: _____	Date: _____ Time: _____ Surveyor: _____ Organization: _____

4.3.6.11 Rain test and watertightness test	**Regulations: LSA Code 1.2.2.4/1.2.2.8/4.1.3.3/4.1.3.4; MSC.81(70) 1/ 10.4/10.4.7**	
Test Procedure	Acceptance Criteria	Significant Test Data
One survival craft exterior or interior light (as the case may be) which has passed the visual inspection, including its complete power source should be subjected to a rain test according to IEC 60945:2002, paragraph 8.8. After having passed the rain test the survival craft light, including its complete power source, should be immersed horizontally under not less than 300 mm of fresh water for at least 24 h. Automatic activated version should be prevented from switching during the test.	The survival craft light should be rot-proof. The survival craft light should comply with the requirements of IEC 60945:2002, paragraph 8.8.2 and should function after the rain test. Additionally, after the water-tightness test, the survival craft light should function and there should be no evidence of water inside the survival craft light.	Results: PASS: FAIL: Comments/Observations

4.3.6.12 Fire test (not for survival craft interior lights)	**Regulations: LSA Code 4.9.1; MSC.81(70) 1/ 10.4/10.4.8**	
Test Procedure	Acceptance Criteria	Significant Test Data
One survival craft exterior light which has passed the visual inspection should be subjected to a fire test. A test pan not less than 30 cm x 35 cm x 6 cm should be placed in an essentially draught-free area. Water should be put in the bottom of the test pan to a depth of at least 1 cm followed by enough petrol to make a minimum total depth of not less than 4 cm. The petrol should then be ignited and allowed to burn freely for at least 30 s. The survival craft exterior light should then be moved through the flames, facing them, with the survival craft exterior light not more than 25 cm above the top edge of the test pan so that the duration of exposure to the flames is at least 2 s.	The survival craft exterior light should not sustain burning or continue melting after being totally enveloped in a fire for a period of at least 2 s and after being removed from the flames. The survival craft exterior light should function after the test.	Results: PASS: FAIL: Comments/Observations

4.4 DAVIT-LAUNCHED LIFEBOATS

EVALUATION AND TEST REPORT

4.4.0 General Information
- 4.4.0.1 General data and specifications
- 4.4.0.2 Submitted drawings, reports and documents
- 4.4.0.3 Quality assurance

4.4.1 Visual inspection
- 4.4.1.1 Occupant space
- 4.4.1.2 Fittings, provisions and ladders
- 4.4.1.3 Engine and starting system
- 4.4.1.4 Steering mechanism
- 4.4.1.5 Release mechanism
- 4.4.1.6 Drain valve

4.4.2 Freeboard, stability and self-righting tests
- 4.4.2.1 Flooded stability test
- 4.4.2.2 Freeboard test
- 4.4.2.3 Self-righting test
- 4.4.2.4 Flooded capsizing test (totally enclosed lifeboats)

4.4.3 Seating strength and space tests
- 4.4.3.1 Seating strength test
- 4.4.3.2 Seating space test

4.4.4 Release mechanism tests
- 4.4.4.1 Simultaneous release
- 4.4.4.2 Towing release test
- 4.4.4.3 Load and release test
- 4.4.4.4 Cyclic loading test
- 4.4.4.5 Actuation force test
- 4.4.4.6 Second release mechanism tests – actuation force and tensile strength

4.4.5 Operational tests
- 4.4.5.1 Manoeuvring
- 4.4.5.2 Liferaft towing
- 4.4.5.3 Endurance, speed and fuel consumption
- 4.4.5.4 Engine out of water
- 4.4.5.5 Compass test
- 4.4.5.6 Helpless person recovery

4.4.6 Towing and painter tests
- 4.4.6.1 Towing test
- 4.4.6.2 Painter release test

4.4.7 Strength tests
- 4.4.7.1 Impact test
- 4.4.7.2 Drop test
- 4.4.7.3 Operation after drop and impact test
- 4.4.7.4 Overload test

4.4.8 Additional tests for fire-protected lifeboats
- 4.4.8.1 Air supply test
- 4.4.8.2 Fire test
- 4.4.8.3 Water spray test

4.4.9 Additional tests for partially-enclosed lifeboats
- 4.4.9.1 Canopy closure test

4.4 DAVIT-LAUNCHED LIFEBOATS EVALUATION AND TEST REPORT

Manufacturer	
Date	
Type	
Place	
Name Surveyor printed	
Signature	
Approving Organization	

Davit-launched lifeboats	Manufacturer: _____ Model: _____ Lot/Serial Number: _____	Date: _____ Time: _____ Surveyor: _____ Organization: _____

4.4.0.1 General data and specifications		**Regulations: LSA Code 4.4, 4.5, 4.6, 4.8 & 4.9**
General Information	Lifeboat Dimensions	Lifeboat Weight
Construction Material: Hull Canopy: Lifeboat Inherent Buoyancy Material: Weight: Volume: Engine Installed: Manufacturer: Type: Power: Gear Ratio: Propeller: Release Mechanism: Manufacturer: Type: SWL: Service: Passenger ship/Cargo ship Occupancy (150 max.): Persons (75 kg each): Or Persons (82.5 kg each): (150 max.)	**Molded Dimensions:** Length: Breadth: Depth:	**Design Weight**: Unloaded Boat: Loose Equipment: Food: Water: Fuel: Persons: **Calculated Loaded Weight:** Fully Equipped: With Persons: **Weight as Tested:** Fully Equipped: Comments/Observations Passed: _____ Failed: _____

Davit-launched lifeboats	Manufacturer: _____ Model: _____ Lot/Serial Number: _____	Date: _____ Time: _____ Surveyor: _____ Organization: _____

4.4.0.2 Submitted drawings, reports and documents

Submitted drawings and documents			**Status**
Drawing No.	**Revision No. & date**	**Title of drawing**	

Submitted reports and documents			**Status**
Report/Document No.	**Revision No. & date**	**Title of report/document**	
		Maintenance Manual -	
		Operations Manual -	

Davit-launched lifeboats	Manufacturer: _____ Model: _____ Lot/Serial Number: _____	Date: _____ Time: _____ Surveyor: _____ Organization: _____

4.4.0.3 Quality assurance	**Regulations: MSC.81(70)2/1.1,1.2**
Except where all appliances of a particular type are required by chapter III of the International Convention for the Safety of Life at Sea, 1974, as amended, or the International Life-Saving Appliance (LSA) Code to be inspected, representatives of the Administration should make random inspections of manufacturers to ensure that the quality of life-saving appliances and materials used comply with the specification of the approved prototype life-saving appliance. Manufacturers should be required to institute a quality control procedure to ensure that life-saving appliances are produced to the same standard as the prototype life-saving appliance approved by the Administration and to keep records of any production tests carried out in accordance with the Administration's instructions.	Quality assurance Standard Used: _____ Quality assurance Procedure: _____ Quality assurance Manual: _____ Description of System: Quality assurance System acceptable? Yes/No Comments/Observations:

Davit-launched lifeboats	Manufacturer: _____ Model: _____ Lot/Serial Number: _____	Date: _____ Time: _____ Surveyor: _____ Organization: _____

4.4.1.1 Occupant space	**Regulations: LSA Code 4.4.1.8, 4.4.2.2/3, 4.4.3.5**	
Test Procedure	Acceptance Criteria	Significant Test Data
Visually inspect the lifeboat. Conduct measurements and verify clearances as required.	**Interior Floor to Canopy Height** Over 50% of the floor area the height should be not less than 1.3 m for lifeboats carrying 9 or fever persons and 1.7 m for lifeboats carrying 24 or more persons. Linear interpolation for occupancy between 9 and 24 persons is permitted. **Seating Space** • Width – at least 430 mm • Depth – at least 100 mm each side of a point 215mm from the back • Knee Space (Seating on seats) at least 635 mm from the back • Knee Width – at least 250 mm • Leg Space (Seating on floor) – at least 1190 mm from the back • Overlapping Seat Vertical Separation – at least 350 mm • Seat Horizontal Overlap – 150 mm maximum • Each seating position should be clearly indicated. **Walkway Surfaces** The surfaces on which persons might walk should have a non-skid finish.	Height: _____ m Typically: Width: _____ mm Depth: _____ mm Knee Space: _____mm Knee Width: _____ mm Leg Space: _____ mm Vert. Separation: _____ mm Overlap: _____ mm Position Indication: Passed/Failed Number of seats provided: _____ Non-Skid Surface: Passed/Failed Comments/Observations

Davit-launched lifeboats	Manufacturer: _____ Model: _____ Lot/Serial Number: _____	Date: _____ Time: _____ Surveyor: _____ Organization: _____

4.4.1.2 Fittings, provisions and ladders (1 of 4)	**Regulations: LSA Code 4.4.7.3/4/5/8/10/11/12**	
Test Procedure	Acceptance Criteria	Significant Test Data
Visually inspect the lifeboat. Conduct measurements and verify clearances as required.	**Fittings and Provisions** .1 Suitable handholds or buoyant lifeline becketed around the lifeboat above the waterline and within reach of a person in the water, except in the vicinity of the rudder and propeller. .2 On other than self-righting lifeboats, handholds on the underside arranged to break away without damaging the lifeboat when subjected to a sufficient impact. .3 Sufficient watertight lockers, compartments or arrangements to provide for storage of the small items of equipment water and provision. .4 Means provided for collecting rainwater. .5 Means provided for storing collected water. .6 Means provided for siting and securing antenna in operating position (if required). .7 Approved position-indicating lights with 12 h capacity provided. .8 Approved light with 12 h capacity sufficient for reading provided inside. .9 Adequate view on all sides for safe launching and maneuvering. .10 Each lifeboat shall be fitted with a permanently affixed approval plate, endorsed by the Administration or its representative containing at least the following items: manufacturer's name and address, lifeboat model and serial number, month and year of manufacturer, number of persons the lifeboat is approved to carry, and the approval information required under paragraph 1.2.2.9.	.1 Passed: _____ Failed: _____ .2 Passed: _____ Failed: _____ Not Applicable .3 Passed: _____ Failed: _____ .4 Passed: _____ Failed: _____ .5 Passed: _____ Failed: _____ .6 Passed: _____ Failed: _____ .7 Passed: _____ Failed: _____ .8 Passed: _____ Failed: _____ .9 Passed: _____ Failed: _____ .10 Passed: _____ Failed: _____ Comments/Observations

Davit-launched lifeboats	Manufacturer: _____ Model: _____ Lot/Serial Number: _____	Date: _____ Time: _____ Surveyor: _____ Organization: _____

4.4.1.2 Fittings, provisions and ladders (2 of 4)	**Regulations: LSA Code 4.4.8, 4.5.2.1/4, 4.5.2/3/4, 4.6.2.8**	
Test Procedure	Acceptance Criteria	Significant Test Data
	.11 The lifeboat is of a highly visible colour where it will assist detection.	Colour of canopy: _____
	.12 Sufficient buoyant oars to make headway in calm seas.	Colour of hull: _____
	.13 Provided with a manual pump suitable for effective bailing or be automatically self-bailing.	Passed: _____ Failed: _____
	Partially enclosed lifeboats	Passed: _____ Failed: _____ Function test:_____ Number and execution:_____
	.14 Provided with permanently attached rigid covers extending over not less than 20% of the length of the lifeboat from the stem and not less than 20% of the length of the lifeboat from the after-most part of the lifeboat.	Passed _____Failed _____ N/A (lifeboats with 2 redundant engines) Passed: _____ Failed: _____
	.15 Fitted with permanently attached foldable canopy which together with the rigid covers completely encloses the occupants of the lifeboat in a weatherproof shelter and protects them from exposure.	Passed: _____ Failed: _____
	.16 Entrances at both ends and on each side are provided.	Passed: _____ Failed: _____
	.17 Entrances in the rigid covers should be weather tight when closed.	Passed: _____ Failed: _____
	.18 Exterior of the lifeboat is of a highly visible color and its interior of a color which does not cause discomfort for the occupants.	Passed: _____ Failed: _____
	.19 The canopy should be so arranged that: .a it is provided with adequate rigid sections or battens to permit erection of the canopy;	Passed: _____ Failed: _____ Passed: _____ Failed: _____ Comments/Observations

Davit-launched lifeboats	Manufacturer: _____ Model: _____ Lot/Serial Number: _____	Date: _____ Time: _____ Surveyor: _____ Organization: _____

4.4.1.2 Fittings, provisions and ladders (3 of 4)	**Regulations: LSA Code 4.5.2.3/5/6/8, 4.5.4, 4.6.2.2/3/4/5**	
Test Procedure	Acceptance Criteria	Significant Test Data
	.b it is insulated to protect the occupants against heat and cold by means of not less than two layers of material separated by an air gap or other equally efficient means; means should be provided to prevent accumulation of water in the air gap;	Passed: _____ Failed: _____
	.c entrances in the canopy are provided with efficient adjustable closing arrangements which can be easily and quickly opened and closed from inside or outside so as to permit ventilation but exclude seawater, wind and cold; means should be provided for holding the entrances securely in the open and closed position;	Passed: _____ Failed: _____
	.d with the entrances closed, it admits sufficient air for the occupants at all times; and	
	.e the occupants can escape in the event of the lifeboat capsizing.	Passed: _____ Failed: _____
		Passed: _____ Failed: _____
	If the lifeboat is intended to have a fixed two-way VHF radiotelephone apparatus, the lifeboat should either have a cabin large enough to accommodate both the equipment and the person using it, or else the construction of the lifeboat must provide a sheltered space.	Passed: _____ Failed: _____
	Totally Enclosed Lifeboats	
	The enclosures should be so arranged that:	Passed: _____ Failed: _____
	.1 access to the lifeboat is provided by hatches which can be closed to make the lifeboat watertight;	Passed: _____ Failed: _____
	.2 hatches are positioned so as to allow launching and recovery operations to be performed without any occupant having to leave the enclosure;	
	a. access hatches can be opened and closed from both inside and outside the lifeboat; and	Passed: _____ Failed: _____
	b. access hatches have means to hold them securely in the open position.	Comments/Observations:

Davit-launched lifeboats	Manufacturer: _____ Model: _____ Lot/Serial Number: _____	Date: _____ Time: _____ Surveyor: _____ Organization: _____

4.4.1.2 Fittings, provisions and ladders (4 of 4)	**Regulations: LSA Code 4.4.4, 4.6.2.7/9/10, 4.6.3.1/3, 4.6.4.1/3**	
Test Procedure	Acceptance Criteria	Significant Test Data
	.3 it is possible to row the lifeboat;	Passed: _____ Failed: _____
	.4 handrails provide a secure handhold for persons moving about the exterior of the lifeboat, and aid embarkation and disembarkation;	Passed: _____ Failed: _____
	.5 persons have access to their seats from an entrance without having to climb over thwarts or other obstructions;	Passed: _____ Failed: _____
	.6 windows or translucent panels to make artificial light unnecessary in day light; and	Passed: _____ Failed: _____
	.7 its exterior is of a highly visible colour and its interior of a light colour which does not cause discomfort to the occupants.	Passed: _____ Failed: _____
	Each seating space is fitted with a safety belt.	Passed: _____ Failed: _____
	The safety belt is of a color contrasting with the belts for seats immediately adjacent and with the seat on which it is fitted	Passed: _____ Failed: _____
	Engine and transmission are controlled from the helmsman position	Passed: _____ Failed: _____
	Air-cooled engines have a duct system to take in cooling air from, and exhaust it to, the outside of the lifeboat. Manually operated dampers provided to enable cooling air to be taken in from, and exhausted to, the interior of the lifeboat.	
	Lifeboat Ladders Ladders that can be used at any boarding entrance should be on board and the lowest step when in place should not be less than 0.4 m below the light waterline.	Passed: _____ Failed: _____
	Other Provisions No buoyant material should be installed external to the hull of the lifeboat except in addition to buoyant material required to float the flooded lifeboat.	Passed: _____ Failed: _____ Comments/Observations

Davit-launched lifeboats	Manufacturer: _____ Model: _____ Lot/Serial Number: _____	Date: _____ Time: _____ Surveyor: _____ Organization: _____

4.4.1.3 Engine and starting system		**Regulations: LSA Code 4.4.6.2/5/6/7/9/11/12**
Test Procedure	Acceptance Criteria	Significant Test Data
Visually inspect the lifeboat.	Type of starting system	Manual/Power
	.1 Two independent rechargeable energy sources available for power starting systems.	YES/NO/NOT APPLICABLE
Conduct measurements and verify clearances as required.	.2 Any required starting aids provided	Passed: _____ Failed: _____
	.3 Starting system is not impeded by engine casing, thwarts, or other obstructions.	Passed: _____ Failed: _____
	.4 Propeller arranged to be disengaged from the engine.	Passed: _____ Failed: _____
	.5 Provision for ahead and astern propulsion.	Passed: _____ Failed: _____
	.6 Exhaust arranged to prevent water from entering engine in normal operation.	Passed: _____ Failed: _____
	.7 The lifeboat is designed with due regard to the safety of persons in the water and to the possibility of damage to the propulsion system by floating debris.	Passed: _____ Failed: _____
	.8 Engine casing made of fire-retardant material or other suitable arrangements providing similar protection.	Fire retardant materials used: _____ Passed: _____ Failed: _____
	.9 Personnel are protected from hot and moving parts.	Passed: _____ Failed: _____
	.10 Shouted order can be heard with engine running at speed necessary for 6 knot operation.	Passed: _____ Failed: _____
	.11 Watertight casing around bottom and sides of starter batteries with a tightly fitting top which provides for necessary gas venting.	Passed: _____ Failed: _____
	.12 Means for recharging engine starting, radio, and searchlight batteries provided by solar charge or ships power supply.	Passed: _____ Failed: _____
	.13 Radio batteries not used to provide power for engine starting.	Passed: _____ Failed: _____
	.14 Recharging means provided for lifeboat batteries (not exceeding 50 V) from ship's power supply can be disconnected at the lifeboat embarkation station.	Passed: _____ Failed: _____
	.15 Instructions for starting and operating engine are water resistant and mounted in a conspicuous place near the engine starting controls.	Passed: _____ Failed: _____ Comments/Observations

Davit-launched lifeboats	Manufacturer: _____ Model: _____ Lot/Serial Number: _____	Date: _____ Time: _____ Surveyor: _____ Organization: _____

4.4.1.4 Steering mechanism		**Regulations: LSA Code 4.4.7.2**
Test Procedure	Acceptance Criteria	Significant Test Data
Visually inspect the lifeboat. Conduct measurements and verify clearances as required.	• A tiller should be capable of controlling the rudder • Rudder permanently attached to the lifeboat • Except when remote steering is provided, the tiller is permanently attached or linked to the rudder stock • Rudder and tiller arranged so as not to be damaged by operation of the release mechanism or propeller	Passed: _____ Failed: _____ Passed: _____ Failed: _____ Passed: _____ Failed: _____ Passed: _____ Failed: _____ Comments/Observations

Davit-launched lifeboats	Manufacturer: _____ Model: _____ Lot/Serial Number: _____	Date: _____ Time: _____ Surveyor: _____ Organization: _____

4.4.1.5 Release mechanism	**Regulations: LSA Code 4.4.7.6.2.2, 4.4.7.6.3/5**	
Test Procedure	Acceptance Criteria	Significant Test Data
Visually inspect the lifeboat.	Clear operating instructions	Passed: _____ Failed: _____
Conduct measurements and verify clearances as required.	Suitably worded danger sign for on load release	Passed: _____ Failed: _____ N/A _____
	On-load release: • The mechanical protection (interlock) engages only when mechanism is completely and properly reset, to prevent accidental release during recovery of the boat	Passed: _____ Failed: _____ N/A _____
	• On-load release mechanism needs deliberate and sustained action by the operator	Passed: _____ Failed: _____ N/A _____
	• Mechanical protection provided beyond that normally required for off load release	Passed: _____ Failed: _____
	• Release control marked in a color that contrasts with the surroundings	Passed: _____ Failed: _____
	Where a single fall system is provided: **Off-load release:** • Where a single fall and hook system is used for launching a lifeboat or rescue boat in combination with a suitable painter, the requirements of onload release capability need not be applicable; in such an arrangement a single capability to release the lifeboat or rescue boat, only when it is fully waterborne, will be adequate.	Passed: _____ Failed: _____ N/A _____ Comments/Observations

Davit-launched lifeboats	Manufacturer: _____ Model: _____ Lot/Serial Number: _____	Date: _____ Time: _____ Surveyor: _____ Organization: _____

4.4.1.6 Drain valve		**Regulations: LSA Code 4.4.7.1**
Test Procedure	Acceptance Criteria	Significant Test Data
Visually inspect the lifeboat. Conduct measurements and verify clearances as required. (Not applicable for self-bailing boats.)	• Fitted near lowest point on the hull • Automatically opens to drain water from the hull when the boat is not waterborne and closes to prevent entry of water when the boat is waterborne • Cap or plug attached to the boat by a lanyard, chain or other suitable means • Readily accessible from inside the lifeboat • Position clearly indicated	Passed: _____ Failed: _____ Passed: _____ Failed: _____ Passed: _____ Failed: _____ Passed: _____ Failed: _____ Passed: _____ Failed: _____ Comments/Observations

Davit-launched lifeboats	Manufacturer: _____ Model: _____ Lot/Serial Number: _____	Date: _____ Time: _____ Surveyor: _____ Organization: _____

4.4.2.1 Flooded stability test		**Regulations: LSA Code 4.4.1.1, 4.6.3.3; MSC.81(70) 1/6.8.1, 6.8.2,6.8.3**
Test Procedure	Acceptance Criteria	Significant Test Data
The lifeboat should be loaded with its equipment. If provision lockers, water tanks and fuel tanks cannot be removed, they should be flooded or filled to the final waterline resulting from this test. Lifeboats fitted with watertight stowage compartments to accommodate individual drinking water containers should have these containers aboard and placed in the stowage compartments, which should be sealed watertight during the flooding tests. Ballast of equivalent weight and density should be substituted for the engine and any other installed equipment that can be damaged by water. Weights representing persons who would be in the water when the lifeboat is flooded (water level more than 500 mm above the seat pan) may be omitted. Weights representing persons who would not be in the water when the lifeboat is flooded (water level less than 500 mm above seat pan) should be placed in the normal seating positions of such persons with their centre of gravity approximately 300 mm above the seat pan. Weights representing persons who would be partly submerged in the water when the lifeboat is flooded (water level between 0 and 500 mm above the seat pan) should additionally have an approximate density of 1 kg/dm³ (for example water ballast containers) to represent a volume similar to a human body.	When loaded as specified, the lifeboat should have positive stability when filled with water to represent flooding which would occur when the lifeboat is holed in any one location below the waterline assuming no loss of buoyancy material and no other damage. In case of totally enclosed lifeboats, water level measured along each seatback in stable flooded condition is not more than 500 mm above the seat pan at any occupant seating position.	Passed: _____ Failed: _____ Trim: _____ List: _____ Max water level above seat pan: _____ mm Passed (Y/N): _____ Comments/Observations

Davit-launched lifeboats	Manufacturer: _____ Model: _____ Lot/Serial Number: _____	Date: _____ Time: _____ Surveyor: _____ Organization: _____

4.4.2.2 Freeboard test		**Regulations: LSA Code 4.4.5.1/2.1/2; MSC.81(70) 1/ 6.8.4/5**
Test Procedure	Acceptance Criteria	Significant Test Data
The lifeboat with its engine should be loaded with a mass equal to that of all the equipment. One half of the number of persons for which the lifeboat is to be approved should be seated in a proper seating position on one side of the centreline. The freeboard should then be measured on the low side.	Each lifeboat with side openings near the gunwale should have a freeboard measured from the waterline to the lowest opening through which the lifeboat may become flooded, of at least 1.5% of the lifeboat's length or 100 mm, whichever is the greater; and Each lifeboat without side openings near the gunwale should not exceed an angle of heel of 20° and should have a freeboard, measured from the waterline to the lowest opening through which the lifeboat may become flooded, of at least 1.5% of the lifeboat's length or 100 mm, whichever is the greater.	Measured Freeboard:_____mm 1.5% of Boat's Length:_____mm Angle of heel, if applicable:_____Deg. Passed: _____ Failed: _____ Comments/Observations

4.4.2.3 Self-Righting Test (Totally Enclosed Lifeboats)		**Regulations: LSA Code 4.6.3.2/4, 4.6.4.2; MSC.81(70) 1/ 6.14.1/1.1/1.2/2/2.1/2.2**
Test Procedure	Acceptance Criteria	Significant Test Data
A suitable means should be provided to rotate the lifeboat about a longitudinal axis to any angle of heel and then release it. The lifeboat, in the enclosed condition, should be incrementally rotated to angles of heel up to and including 180° and should be released. These tests should be conducted in the following conditions of load: .1 when the lifeboat with its engine is loaded in the normal position with properly secured weights representing the fully equipped lifeboat with a full complement of persons on board. The weight used to represent each person, assumed to have an average mass of 82.5 kg, should be secured at each seat location and have its centre of gravity approximately 300 mm above the seat pan so as to have the same effect on stability as when the lifeboat is loaded with the number of persons for which it is to be approved; and .2 when the lifeboat is in the light condition.	After release, the lifeboat should always return to the upright position without the assistance of the occupants. At the beginning of these tests, the engine should be running in neutral position and: .1 unless arranged to stop automatically when inverted, the engine should continue to run when inverted and for 30 min after the lifeboat has returned to the upright position; and .2 if the engine is arranged to stop automatically when inverted, it should be easily restarted and run for 30 min after the lifeboat has returned to the upright position. Water does not enter the engine.	**Loaded:** Passed _____ Failed _____ **Light:** Passed: _____ Failed: _____ Passed: _____ Failed: _____ Passed: _____ Failed: _____ Comments/Observations

Davit-launched lifeboats	Manufacturer: _____ Model: _____ Lot/Serial Number: _____	Date: _____ Time: _____ Surveyor: _____ Organization: _____

4.4.2.4 Flooded capsizing test (totally enclosed lifeboats)		**Regulations: LSA Code 4.1.6.3; MSC.81(70) 1/6.14.3-5**
Test Procedure	Acceptance Criteria	Significant Test Data
The lifeboat should be placed in the water and fully flooded until the lifeboat can contain no additional water. All entrances and openings should be secured to remain open during the test. For the purpose of this test, the mass and distribution of the occupants may be disregarded. However, the equipment, or equivalent mass, should be secured in the lifeboat in the normal operating position. Using a suitable means, the lifeboat should be rotated about a longitudinal axis to a heel angle of 180° and then released.	After release, the lifeboat should attain a position that provides an above-water escape for the occupants. *Note*: Several tests may have to be conducted if holes in different areas would create different flooding conditions.	Passed: _____ Failed: _____ Passed: _____ Failed: _____ Comments/Observations

4.4.3.1 Seating strength test		**Regulations: LSA Code 4.4.1.5.1; MSC.81(70) 1/ 6.6.1**
Test Procedure	Acceptance Criteria	Significant Test Data
The seating should be loaded with a mass of 100 kg in each position allocated for a person to sit in the lifeboat. For a totally enclosed lifeboat, the seat belts should be demonstrated to be capable of holding a person with a mass of 100 kg securely in place with the lifeboat in the capsized position. This test may be conducted in connection with the righting test.	The seating should be able to support this loading without any permanent or damage. The seat belts should hold a mass of 100 kg securely in place with the lifeboat in the capsized position.	Passed: _____ Failed: _____ Passed: _____ Failed: _____ Comments/Observations

Davit-launched lifeboats	Manufacturer: _____ Model: _____ Lot/Serial Number: _____	Date: _____ Time: _____ Surveyor: _____ Organization: _____

4.4.3.2 Seating space test		**Regulations: LSA Code 4.4.2.2.1, 4.4.3.1/2; MSC.81(70) 1/ 6.7.1**
Test Procedure	Acceptance Criteria	Significant Test Data
The lifeboat should be fitted with its engine and its equipment. The number of persons for which the lifeboat is to be approved, having an average mass of 75 kg for a lifeboat intended for a passenger ship or 82.5 kg for a lifeboat intended for a cargo ship and wearing a lifejacket and any other essential equipment should board the lifeboat as quickly as possible. The lifeboat should then be maneuvered and all equipment on board tested by an individual to demonstrate that the equipment can be operated without difficulty and without interference with the occupants.	The number of persons should be able to board the lifeboat and be properly seated within a period of 3 min in the case of a lifeboat intended for a cargo ship and within a period of 10 min in the case of a lifeboat intended for a passenger ship. Rapid disembarkation should also be possible. The boat can be manoeuvered and all equipment can be operated without difficulty or interference with the occupants.	**Cargo Ship:** Boarding Time:_____min Passed: _____ Failed: _____ **Passenger Ship:** Passed: _____ Failed: _____ N/A _____ Passed: _____ Failed: _____ SOLAS inherently buoyancy lifejacket worn: Yes/No Comments/Observations

Davit-launched lifeboats	Manufacturer: _____ Model: _____ Lot/Serial Number: _____	Date: _____ Time: _____ Surveyor: _____ Organization: _____

4.4.4.1 Simultaneous release		**Regulations: LSA Code 4.4.7.6, 4.4.7.6.1/2/2.1/2.2/5; MSC.81(70) 1/ 6.9.1, 6.9.2**
Test Procedure	Acceptance Criteria	Significant Test Data
Every lifeboat to be launched by fall or falls, with its engine fitted should be suspended from the release mechanism just clear of the ground or the water. The lifeboat should be loaded so that the total mass equals 1.1 times the mass of the lifeboat, all its equipment and the number of persons for which the lifeboat is to be approved. The lifeboat release control should be activated. The test should be repeated with the lifeboat waterborne in the light condition and in a 10% overload condition.	It should be confirmed that the lifeboat will simultaneously release from each fall which it is connected without binding or damage to any part of the lifeboat or the release mechanism. It should be confirmed that the lifeboat will simultaneously release from each fall to which it is connected when fully waterborne in the light condition and in a 10% overload condition. Single fall systems not intended for on-load operation are exempt from this test.	1.1 x Loaded Weight:_____N **On load release:** <u>1.1 load</u> Passed: _____ Failed: _____ **Waterborne release:** <u>1.1 load:</u> Passed: _____ Failed: _____ Light condition: Passed: _____ Failed: _____ Comments/Observations

Davit-launched lifeboats	Manufacturer: _____ Model: _____ Lot/Serial Number: _____	Date: _____ Time: _____ Surveyor: _____ Organization: _____

4.4.4.2 Towing release test		**Regulations: LSA Code 4.4.7.6.5; MSC.81(70) 1/6.9.3**
Test Procedure	Acceptance Criteria	Significant Test Data
With the operating mechanism disconnected it should be demonstrated when the lifeboat is loaded with its full complement of persons and equipment and towed at speeds of 5 knots that the moveable hook component stays closed. Furthermore, with the operating mechanism connected, it should be demonstrated that the lifeboat when loaded with its full complement of persons and equipment when towed at speeds of 5 knots can be released. Both of the above should be demonstrated as follows as follows: .1 a force equal to 25% of the safe working load of the hook should be applied to the hook in the lengthwise direction of the boat at an angle of 45° to the vertical. This test should be conducted in the aftward as well as the forward direction; .2 a force equal to the safe working load of the hook should be applied to the hook in an athwartships direction at an angle of 20° to the vertical. This test should be conducted on both sides; and .3 a force equal to the safe working load of the hook should be applied to the hook in a direction halfway between the positions of tests 1 and 2 (i.e. 45° to the longitudinal axis of the boat in plan view) at an angle of 33° to the vertical. This test should be conducted in four positions.	There should be no damage as a result of these tests. The lifeboat is released satisfactorily by the release mechanism. Single fall systems not intended for on-load operation are exempt from this test.	Operating mechanism disconnected and boat towed at 5 kts: _____Pass _____ Fail <u>Operating mechanism connected tests</u>. Test 1: 25% SWL, lengthwise to the boat at 45° to the vertical: Force Applied: _____ N. Forward direction: _____Pass _____ Fail Aft direction: _____Pass _____ Fail Test 2: 100% SWL, athwartships at 20° to the vertical: Force Applied: _____ N. Starboard: _____Pass _____ Fail Port: _____Pass _____ Fail Test 3: 100% SWL, 45° to the longitudinal axis of the boat in plan view at an angle of 33° to the vertical. Force Applied: _____ N. Position 1: _____Pass _____ Fail Position 2: _____Pass _____ Fail Position 3: _____Pass _____ Fail Position 4: _____Pass _____ Fail Comments/Observations

Davit-launched lifeboats	Manufacturer: _____ Model: _____ Lot/Serial Number: _____	Date: _____ Time: _____ Surveyor: _____ Organization: _____

4.4.4.3 Load and release test		**Regulations: LSA Code 4.4.7.6.4; MSC.81(70) 1/6.9.4.1, 6.9.4.2**
Test Procedure	Acceptance Criteria	Significant Test Data
A release mechanism should be conditioned and tested as follows: The lifeboat release and retrieval system and the longest used connection cable/linkage associated with the system should be mounted and adjusted according to instructions from the original equipment manufacturer and then loaded to 100% of its safe working load and released. Load and release should be repeated 50 times. the lifeboat release and retrieval system should then be disassembled, the parts examined and wear recorded. The release and retrieval system should then be reassembled.	During the 50 releases, the lifeboat release and retrieval system should be released simultaneously from each fall to which it is connected without any binding or damage to any part of the lifeboat release and retrieval system. The system should be considered as "failed" if any failure during the conditioning or unintended release occurs when load is applied but the system has not yet been operated. Single fall systems not intended for on-load operation are exempt from this test.	Working Load:_____N Force Applied:_____N Cable Length: _____m Check the box for each release: 1: ☐ 2: ☐ 3: ☐ 4: ☐ 5: ☐ 6: ☐ 7: ☐ 8: ☐ 9: ☐ 10: ☐ 11: ☐ 12: ☐ 13: ☐ 14: ☐ 15: ☐ 16: ☐ 17: ☐ 18: ☐ 19: ☐ 20: ☐ 21: ☐ 22: ☐ 23: ☐ 24: ☐ 25: ☐ 26: ☐ 27: ☐ 28: ☐ 29: ☐ 30: ☐ 31: ☐ 32: ☐ 33: ☐ 34: ☐ 35: ☐ 36: ☐ 37: ☐ 38: ☐ 39: ☐ 40: ☐ 41: ☐ 42: ☐ 43: ☐ 44: ☐ 45: ☐ 46: ☐ 47: ☐ 48: ☐ 49: ☐ 50: ☐ Passed_____ Failed _____ Comments/Observations

Davit-launched lifeboats	Manufacturer: _____ Model: _____ Lot/Serial Number: _____	Date: _____ Time: _____ Surveyor: _____ Organization: _____

4.4.4.4 Cyclic loading test		**Regulations: LSA Code 4.4.7.6.4; MSC.81(70) 1/6.9.4.3**
Test Procedure	Acceptance Criteria	Significant Test Data
The hook assembly, whilst disconnected from the operating mechanism, should be tested 10 times with cyclic loading from zero load to 1.1 times the safe working load, at a nominal 10 seconds per cycle; unless the release mechanism has been specifically designed to operate as an off-load hook with on-load capability using the weight of the boat to close the hook, in this case the cyclic load should be from no more than 1% to 1.1 times the SWL. For cam-type designs, the test should be carried out at an initial cam rotation of 0º (fully reset position), and repeated at 45º in either direction, or 45º in one direction if restricted by design.	The specimen should remain closed during the test. The system should be considered as "failed" if any failure during this test or any unintended release or opening occurs. Single fall systems not intended for on-load operation are exempt from this test.	Working Load:_____N Force Applied:_____N Check the box for each release and/or strike out the cam rotation if no applicable: Cam rotation 0°: 1: ☐ 2: ☐ 3: ☐ 4: ☐ 5: ☐ 6: ☐ 7: ☐ 8: ☐ 9: ☐ 10: ☐ Cam rotation +45°: 1: ☐ 2: ☐ 3: ☐ 4: ☐ 5: ☐ 6: ☐ 7: ☐ 8: ☐ 9: ☐ 10: ☐ Cam rotation -45°: 1: ☐ 2: ☐ 3: ☐ 4: ☐ 5: ☐ 6: ☐ 7: ☐ 8: ☐ 9: ☐ 10: ☐ Passed: _____ Failed:_____ Comments/Observations

Davit-launched lifeboats	Manufacturer: _____ Model: _____ Lot/Serial Number: _____	Date: _____ Time: _____ Surveyor: _____ Organization: _____

4.4.4.5 Actuation force test	**Regulations: LSA Code 4.4.7.6.4; MSC.81(70) 1/6.9.4.4**	
Test Procedure	Acceptance Criteria	Significant Test Data
The cable and operating mechanism should then be reconnected to the hook assembly; and the lifeboat release and retrieval system should then be demonstrated to operate satisfactorily under its safe working load. The demonstration should verify that any interlocks, indicators and handles are still functioning and are correctly positioned in accordance with the operation and safety instruction from the original equipment manufacturer.	The actuation force should be no less than 100 N and no more than 300 N, if a cable is used it should be the maximum length specified by the manufacturer, and secures in the same manner it would be secured in the lifeboat. The release mechanism is deemed to have passed the testing in 4.4.4.3, 4.4.4.4 and 4.4.4.5 when the tests have been conducted successfully. The system should be considered as "failed" if any failure during this test or any unintended release or opening occurs. Single fall systems not intended for on-load operation are exempt from this test.	Actuation Force: _____ N Cable Length: _____m Passed: _____ Failed:_____ Comments/Observations

Davit-launched lifeboats	Manufacturer: _____ Model: _____ Lot/Serial Number: _____	Date: _____ Time: _____ Surveyor: _____ Organization: _____

4.4.4.6 Second release mechanism tests - actuation force and tensile strength	**Regulations: LSA Code 4.4.7.6.4; MSC.81(70) 1/6.9.5.1, 6.9.5.2**	
Test Procedure	Acceptance Criteria	Significant Test Data
A second release mechanism should be tested as follows: .1 the actuation force of the release mechanism should be measured loaded with 100% of its safe working load. If a cable is used, it should be of the maximum length specified by the manufacturer, and secured in the same manner it would be secured in a lifeboat. The demonstration should verify that any interlocks, indicators and handles are still functioning and are correctly positioned in accordance with the operation and safety instruction from the original equipment manufacturer; and .2 the release mechanism should be mounted on a tensile strength testing device. The load should be increased to at least six times the working load of the release mechanism.	.1 The actuation force should be no less than 100 N and no more than 300 N. .2 The release mechanism does not fail. Single fall systems not intended for on-load operation are exempt from this test.	Actuation Force: _____ N Cable Length: _____m Tensile strength @ 6xSWL. Force applied: _____ N. Passed: _____ Failed:_____ Comments/Observations

Davit-launched lifeboats	Manufacturer: _____ Model: _____ Lot/Serial Number: _____	Date: _____ Time: _____ Surveyor: _____ Organization: _____

4.4.5.1 Manoeuvring		**Regulations: LSA Code 1.2.2.8; MSC.81(70) I/ 6.10.1**
Test Procedure	Acceptance Criteria	Significant Test Data
The lifeboat should be loaded with weights equal to the mass of its equipment and the number of persons for which the lifeboat is to be approved. The engine should be started and the lifeboat manoeuvred for a period of at least 4 h to demonstrate satisfactory operation.	The lifeboat should manoeuvre and operate satisfactorily.	Passed: _____ Failed: _____ Comments/Observations

4.4.5.2 Liferaft Towing		**Regulations: LSA Code 4.4.6.8; MSC.81(70) I/ 6.10.1**
Test Procedure	Acceptance Criteria	Significant Test Data
The lifeboat should be loaded with weights equal to the mass of its equipment and the number of persons for which the lifeboat is to be approved. The maximum towing force of the lifeboat should then be determined. This information should be used to determine the largest fully loaded liferaft the lifeboat can tow at 2 knots. The fitting designated for towing other craft should be secured to a stationary object by a towrope. The engine should be operated ahead at full speed for a period of at least 2 minutes, and the towing force measured and recorded.	The maximum towing force of the lifeboat should be recorded on the type approval certificate. There should be no damage to the towing fitting or its supporting structure.	Bollard Pull:_____N (To be recorded on type approval certificate) Passed: _____ Failed: _____ Passed: _____ Failed: _____ Comments/Observations

Davit-launched lifeboats	Manufacturer: _____ Model: _____ Lot/Serial Number: _____	Date: _____ Time: _____ Surveyor: _____ Organization: _____

4.4.5.3 Endurance, speed and fuel consumption	**Regulations: LSA Code 4.4.6.8; MSC.81(70) I/6.10.1**	
Test Procedure	Acceptance Criteria	Significant Test Data
The lifeboat should be loaded with weights equal to the mass of its equipment and the number of persons for which the lifeboat is to be approved. The lifeboat should be run at a speed of not less than 6 knots for a period, which is sufficient to ascertain the fuel consumption and to establish that the fuel tank has the required capacity.	The speed of a lifeboat when proceeding ahead in calm water when loaded with its full complement of persons and equipment and with all engine-powered auxiliary equipment in operation, should be at least 6 knots. Sufficient fuel, suitable for use thought out the temperature ranged expected in the area in which the ship operates, should be provided to run the fully loaded lifeboat at 6 knots for a period of not less than 24 h.	Measured Speed (without spray system): _____ knots Measured Speed (with spray system): _____ knots Passed: _____ Failed: _____ Consumption: ____ L/h Tank Capacity: _____ L Endurance: _____ hrs Sufficient tank capacity: Passed/Failed Comments/Observations

4.4.5.4 Engine Out of Water	**Regulations: LSA Code 4.4.6.3; MSC.81(70) I/ 6.10.5**	
Test Procedure	Acceptance Criteria	Significant Test Data
The engine should be operated for at least 5 min at idling speed under conditions simulating normal storage.	The engine should not be damaged as a result of this test.	Passed: _____ Failed: _____ For engines with "wet" exhaust system: Type of impeller, if applicable: _____ Impeller damaged after test: Y/N Comments/Observations

Davit-launched lifeboats	Manufacturer: _____ Model: _____ Lot/Serial Number: _____	Date: _____ Time: _____ Surveyor: _____ Organization: _____

4.4.5.5 Compass test	**Regulations: LSA Code 4.4.8.5; MSC.81(70) I/ 6.10.7**	
Test Procedure	Acceptance Criteria	Significant Test Data
It should be determined that the compass performance is satisfactory and that it is not unduly affected by magnetic fittings and equipment in the lifeboat.	The compass operates satisfactorily.	Compass Type: _____ Passed: _____ Failed: _____ Comments/Observations

4.4.5.6 Helpless person recovery	**Regulations: LSA Code 4.4.3.4; MSC.81(70) I/ 6.10.8**	
Test Procedure	Acceptance Criteria	Significant Test Data
It should be demonstrated by test that it is possible to bring helpless people on board the lifeboat from the sea.	Helpless people can be brought on board the lifeboat from the sea.	Passed: _____ Failed: _____ Comments/Observations

Davit-launched lifeboats	Manufacturer: _____ Model: _____ Lot/Serial Number: _____	Date: _____ Time: _____ Surveyor: _____ Organization: _____

4.4.6.1 Towing test	**Regulations: LSA Code 4.4.7.7; MSC.81(70) I/ 6.11.1**	
Test Procedure	Acceptance Criteria	Significant Test Data
It should be demonstrated that the fully equipped lifeboat, loaded with a properly distributed mass equal to the mass of the number of persons for which it is to be approved, can be towed at a speed of not less than 5 knots in calm water and on an even keel.	The lifeboat should not exhibit unsafe or unstable characteristics. There should be no damage to the lifeboat or its equipment as a result of this test.	Passed: _____ Failed: _____ Comments/Observations

4.4.6.2 Painter release test	Regulations: LSA Code 4.4.7.7; MSC.81(70) I/ 6.11.1,6.11.2,6.11.3	
Test Procedure	Acceptance Criteria	Significant Test Data
It should be demonstrated that the painter release mechanism can release the painter on a fully equipped and loaded lifeboat that is being towed at a speed of not less than 5 knots in calm water. The painter release mechanism should be tested in several distinct directions of the upper hemisphere not obstructed by the canopy or other constructions in the lifeboat. The directions specified in test 4.4.4.2 should be used if possible.	The painter should release and there should be no damage to the lifeboat or its equipment as a result of this test.	Passed: _____ Failed: _____ Test Direction Position 1: _____Pass _____ Fail Position 2: _____Pass _____ Fail Position 3: _____Pass _____ Fail Position 4: _____Pass _____ Fail Comments/Observations

Davit-launched lifeboats	Manufacturer: _____ Model: _____ Lot/Serial Number: _____	Date: _____ Time: _____ Surveyor: _____ Organization: _____

4.4.7.1 Impact test (1 of 3)	**Regulations: LSA Code 4.4.1.7, 4.6.5; MSC.81(70) I/ 6.4.1/2, 6.4.5, 6.4.7.1/2/3/4/5, 6.17**	
Test Procedure	Acceptance Criteria	Significant Test Data
In case of lifeboats launched by falls; The fully equipped lifeboat, including its engine, should be loaded with weights equal to the mass of the number of persons for which the lifeboat is to be approved. The weights should be distributed to represent the normal loading in the lifeboat. Skates or fenders, if required, should be in position. The lifeboat, in a free hanging position, should be pulled laterally to a position so that when released it will strike a fixed rigid vertical surface at a velocity of 3.5 m/s (keel is raised 0.624 m above the free hanging position). The boat should be released to impact against the rigid vertical surface. In the case of totally enclosed lifeboats, the acceleration forces should be measured and evaluated at different positions within the prototype lifeboat to determine the most severe occupant exposure to acceleration considering the effects of fenders, lifeboat elasticity, and seating arrangement. In case of totally enclosed lifeboats, representative safety belts and fastenings which will experience high loads as a result of the impact should be secured about weights equal to 100 kg to simulate holding a person during the test.	The impact test should be considered successful if: .1 no damage has been sustained that would affect the lifeboat's efficient functioning; .2 machinery and other equipment has operated to full satisfaction; .3 no significant ingress of seawater has occurred; and .4 accelerations measured during the impact and subsequent rebound, if required during the impact test, are in compliance with the criteria of the "Emergency Limits" specified in table 2 or table 3, respectively.	CDRR Index: _____ N/A CAR Index: _____ N/A Final Evaluation: Passed: _____ Failed: _____ Comments/Observations

Davit-launched lifeboats	Manufacturer: _____ Model: _____ Lot/Serial Number: _____	Date: _____ Time: _____ Surveyor: _____ Organization: _____

4.4.7.1 Impact test (2 of 3)	**Regulations: LSA Code 4.6.5; MSC.81(70) 1/6.17.1 to 6.17.14**
Measuring and Evaluating Acceleration Forces Selection, placement and mounting of accelerometers The accelerometers used to measure the acceleration forces in the lifeboat should: .1 have adequate frequency response for the test in which they are to be used but the frequency response should at least be in the range of 0 to 200 Hz; .2 have adequate capacity for the acceleration forces that will occur during the tests; and .3 have an accuracy of ±5%. Accelerometers should be placed in the lifeboat, parallel to the principal axes of the lifeboat, at those locations necessary to determine the worst occupant exposure to acceleration. The accelerometers should be mounted on a rigid part of the interior of the lifeboat in a manner to minimize vibration and slipping. A sufficient number of accelerometers should be used at each location at which acceleration forces are measured so that all likely acceleration forces at that location can be measured. The selection, placement, and mounting of the accelerometers should be to the satisfaction of the Administration. **Recording method and rate** The measured acceleration forces may be recorded on magnetic media as either an analog or a digital signal or a paper plot of the acceleration signal may be produced. If acceleration forces are to be recorded and stored as a digital signal, the sampling rate should be at least 500 samples per second. Whenever an analogue acceleration signal is converted to a digital signal, the sampling rate should be at least 500 samples per second.	**Evaluation with the dynamic response model** The dynamic response model is the preferred method to evaluate potential for the occupant in a lifeboat to be injured by exposure to acceleration forces. In the dynamic response model, the human body is idealized as a single-degree-of-freedom, spring-mass acting in each coordinate direction as shown in figure 1. The response of the body mass relative to the seat support, which is excited by the measured accelerations, can be evaluated using a procedure acceptable to the Administration. The parameters to be used in the analysis are shown in table 1 for each coordinate direction. Before performing the dynamic response analysis, the measured accelerations should be oriented to the primary axes of the seat. The desired outcome from the dynamic response analysis is the displacement time-history of the body mass relative to the seat support in each coordinate direction. At all times, the following expression should be satisfied: $$CDRR = \sqrt{\left(\frac{d_x}{S_x}\right)^2 + \left(\frac{d_y}{S_y}\right)^2 + \left(\frac{d_z}{S_z}\right)^2} \leq 1$$ where d_x, d_y and d_z are the concurrent relative displacements of body mass with respect to the seat support, in the x, y and z body axes, as computed from the dynamic response analysis and S_x, S_y, and S_z, are relative displacements which are presented in table 2 for the appropriate launch condition. **Evaluation using the SRSS method** In lieu of the evaluation with the dynamic response model, the potential for an occupant in a lifeboat to become injured by an acceleration can be evaluated using the SRSS method. Before performing the SRSS analysis, the measured accelerations should be oriented to the primary axes of the seat.

Davit-launched lifeboats	Manufacturer: _____ Model: _____ Lot/Serial Number: _____	Date: _____ Time: _____ Surveyor: _____ Organization: _____

4.4.7.1 Impact test (3 of 3)

Figure 1 – Independent Single Degree-of-Freedom Representation of the Human Body

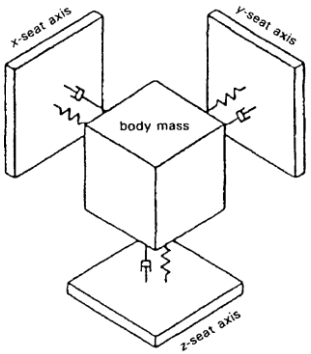

Table 1 – Parameters of the Dynamic Response Model

Coordinate Axis	Natural Frequency (rad/s)	Damping Ratio
X	62.8	0.100
Y	58.0	0.090
Z	52.9	0.224

Table 2 – Suggested Displacements Limits for Lifeboats

Acceleration direction	Displacement (cm) Training	Emergency
+X = Eyeballs In	6.96	8.71
-X = Eyeballs Out	6.96	8.71
+Y = Eyeballs Right	4.09	4.95
-Y = Eyeballs Left	4.09	4.95
+Z = Eyeballs Down	5.33	6.33
-Z = Eyeballs Up	3.15	4.22

Regulations: - LSA Code 4.6.5; MSC.81(70) 1/ 6.17.9 to 6.17.17

Full-scale acceleration data should be filtered with no less than the equivalent of a 20 Hz low-pass filter. Any filtering procedure acceptable to the Administration may be used.

Acceleration data measured on a model should be filtered with a low-pass filter having a frequency not less than that obtained with the following expression:

$$f_{model} = \frac{20}{\sqrt{\frac{L_{model}}{L_{prototype}}}}$$

Where f_{model} is the frequency of the filter to be used, L_{model} is the length of the model lifeboat, and $L_{prototype}$ is the length of the prototype lifeboat.
At all times, the following expression should be satisfied:

$$CAR = \sqrt{\left(\frac{g_x}{G_x}\right)^2 + \left(\frac{g_y}{G_y}\right)^2 + \left(\frac{g_z}{G_z}\right)^2} \leq 1$$

where g_x, g_y, and g_z are the concurrent accelerations in the x, y and z seat axes, and G_x, G_y, and G_z are allowable accelerations, which are presented in table 3 for the appropriate launch condition.

Table 3 – SRSS Acceleration Limits for Lifeboats

Acceleration direction	Acceleration Training	Emergency
+X = Eyeballs In	15.0	18.0
-X = Eyeballs Out	15.0	18.0
+Y = Eyeballs Right	7.0	7.0
-Y = Eyeballs Left	7.0	7.0
+Z = Eyeballs Down	7.0	7.0
-Z = Eyeballs Up	7.0	7.0

Davit-launched lifeboats	Manufacturer: _____ Model: _____ Lot/Serial Number: _____	Date: _____ Time: _____ Surveyor: _____ Organization: _____

4.4.7.2 Drop test		**Regulations: LSA Code 4.4.1.7; MSC.81(70) 1/6.4.3/4/5, 6.4.7.1/2/3/4**
Test Procedure	Acceptance Criteria	Significant Test Data
The fully equipped lifeboat, with its engine, should be loaded with weights equal to the mass of the maximum number of persons for which the lifeboat is to be approved. Included in this loading should be a weight of 100 kg loaded in one of each type of seat installed in the lifeboat. The remainder of the weights should be distributed to represent the normal loading condition but need not be placed 300 mm above the seat pan. The lifeboat should then be suspended above the water so that the distance from the lowest point of the lifeboat to the water is 3 m. The lifeboat should then be released so that it falls freely into the water. The drop test should be conducted with the lifeboat that was used in the impact test.	The drop test should be considered successful if: .1 no damage has been sustained that would affect the lifeboat's efficient functioning; .2 the damage caused by the drop tests has not increased significantly as a result of the test 4.5.7.3; .3 machinery and other equipment has operated t o full satisfaction; and .4 no significant ingress of seawater has occurred.	Passed: _____ Failed: _____ Comments/Observations

Davit-launched lifeboats	Manufacturer: _____ Model: _____ Lot/Serial Number: _____	Date: _____ Time: _____ Surveyor: _____ Organization: _____

4.4.7.3 Operation after drop and impact test	**Regulations: LSA Code 4.4.1.7; MSC.81(70) 1f/ 6.4.5, 6.4.7.2, 6.10.1**	
Test Procedure	Acceptance Criteria	Significant Test Data
After the impact and drop tests, the lifeboat should be carefully examined to detect the position and extent of damage that may have occurred as a result of these tests, and an operational test should be conducted in accordance with 4.4.5.3 Then the lifeboat should be unloaded, cleaned and carefully examined to detect the position and extent of additional damage that may have occurred as a result of the drop and impact tests.	The damage caused by the impact and drop tests has not increased significantly as a result of the operational test.	Passed: _____ Failed: _____ Comments/Observations

Davit-launched lifeboats	Manufacturer: _____ Model: _____ Lot/Serial Number: _____	Date: _____ Time: _____ Surveyor: _____ Organization: _____

4.4.7.4 Overload test (1 of 3)		**Regulations: LSA Code 4.4.1.6/6.2; MSC.81(70) 1/6.3.1/2/3/4/4.1/4.2/4.3/4.4/5**
Test Procedure	Acceptance Criteria	Significant Test Data
In case of lifeboat's launched by falls; The unloaded lifeboat should be placed on blocks or suspended from the lifting hooks and sights should be erected for measuring keel sag. The following measurements should then be made: .1 deflection of keel amidships (ΔK); .2 change in length as measured between the top of stem and stern posts (ΔL); .3 change in breadth over the gunwale at the quarter length forward (ΔB1), amidships (ΔB 2) and the quarter length aft (ΔB3); and .4 change in depth measured from gunwale to keel (ΔD). The lifeboat should then be loaded with properly distributed weights to represent the fully equipped lifeboat loaded with the full complement of persons for the type of ship for which it is to be approved. The measurements should again be made. Additional weights should then be added so that the suspended load is 25%, 50%, 75% and 100% greater than the weight of the fully equipped and loaded lifeboat. In the case of metal lifeboats, the testing should stop at 25% overload.	The keel deflection amidships and change in breadth over the gunwale at the quarter length forward, amidships and aft should not exceed 1/400th of the lifeboat's length when the lifeboat is subjected to 25% overload.	Unloaded (Initial measurement): K _____ L_____L/400 _____ B1 _____ B2 _____ B3 _____ D _____ Full Load: K_____ΔK _____ L_____ΔL _____ ΔB1_____ ΔB2_____ ΔB3 _____ D_____♦D _____ 25% Overload: K_____ΔK _ L/400 ≥ ΔK? YES (Pass)_____NO (Fail) _____ L_____ ΔL __ B_____ ΔB __ D_____ ΔD __ Comments/Observations

Davit-launched lifeboats	Manufacturer: _____ Model: _____ Lot/Serial Number: _____	Date: _____ Time: _____ Surveyor: _____ Organization: _____

4.4.7.4 Overload test (2 of 3)		**Regulations: LSA Code 4.4.1.6/6.2; MSC.81(70) 1/ 6.3.3/4/5/6**
Test Procedure	Acceptance Criteria	Significant Test Data
The weights for the various overload conditions should be distributed in proportion to the loading of the lifeboat in its service condition, but the weights used to represent the persons need not be placed 300 mm above the seat pan. Testing by filling the lifeboat with water should not be accepted as this method of loading does not give the proper distribution of weight. Machinery may be removed in order to avoid damage to it, in which case weights should be added to the lifeboat to compensate for the removal of such machinery. At each incremental overload, the measurements should be made. The weights should then be removed and the dimensions of the lifeboat checked. If the lifeboat is made of GRP, such measurement should be taken after a lapse of time sufficient to permit the GRP to recover its original form (approximately 18 h).	The results at 100% overload, if required, should be approximately in proportion to those obtained at 25% overload. No significant residual deflection should result. Any permanent deflection as a result of these tests should be recorded.	50% Overload: K_____ΔK ____ L_____ΔL ____ B_____ΔB ____ D_____ΔD ____ 75% Overload: K_____ΔK ____ L_____ΔL ____ B_____ΔB ____ D_____ΔD ____ 100% Overload: K_____ΔK ____ ♦K 100% ≤≈ 4 x ΔK 25% Passed _____ Failed _____ L_____ΔL _____ ♦L 100% ≤≈ 4 x ΔL 25% Passed _____ Failed _____ B_____ΔB _____ Comments/Observations

Davit-launched lifeboats	Manufacturer: _____ Model: _____ Lot/Serial Number: _____	Date: _____ Time: _____ Surveyor: _____ Organization: _____

4.4.7.4 Overload test (3 of 3)		**Regulations: LSA Code 4.4.1.6/6.2; MSC.81(70) 1/ 6.4.5**
Test Procedure	Acceptance Criteria	Significant Test Data
		♦B100% ≤ ≈ 4 x ΔB 25% Passed_____ Failed _____ D ΔD ♦D100% ≤ ≈ 4 x ΔD 25% Passed _____ Failed _____ Unloaded (Final measurement): K ΔK K (Initial) ≈ K(Final) Passed _____ Failed _____ L ΔL L (Initial) = ≈ L (Final) Passed _____ Failed _____ B ΔB B (Initial) ≈ B (Final) Passed _____ Failed _____ D ♦D D (Initial) ≈ D (Final)? Passed _____ Failed _____ Final measurement taken h/min after removal of the weights Passed _____ Failed _____ Comments/Observations

Davit-launched lifeboats	Manufacturer: _____ Model: _____ Lot/Serial Number: _____	Date: _____ Time: _____ Surveyor: _____ Organization: _____

4.4.8.1 Air supply test		**Regulations: LSA Code 4.8; MSC.81(70) 1/6.15**
Test Procedure	Acceptance Criteria	Significant Test Data
All entrances and openings of the lifeboat should be closed, and the air supply to the inside of the lifeboat turned on to the design air pressure. The engine should then be run at revolutions necessary to achieve full speed with the fully loaded boat including all persons and with the sprinkler system in use for a period of 5 min, stopped for 30 s, then restarted for a total running time of 10 min.	During the 10-minute running time, the atmospheric pressure within the enclosure should be continuously monitored to ascertain that a small positive air pressure is maintained within the lifeboat and to confirm that noxious gases cannot enter. The internal air pressure should never fall below the outside atmospheric pressure, nor should it exceed outside atmospheric pressure by more than 20 hPa during the test. It should be ascertained, by starting the engine with air supply turned off, that when the air supply is depleted, automatic means are activated to prevent a dangerous underpressure of more than 20 hPa being developed within the lifeboat. The system should have visual indicators to indicate the pressure of the air supply at all times.	Test Duration with Positive Air Pressure: min Engine stopped; Overpressure: hPa Air Supply depleted Underpressure: hPa Passed _____ Failed _____ Passed _____ Failed _____ Air System:_____ engine rev at test: _____rpm Nominal max. pressure:_____bar total air bottle volume: _____l Bottle pressure at srart: _____bar Bottle pressure after 10 min _____bar Total required air vollume= Pressure at start Pressure after 10') x total air bottle volume=_____ l Comments/Observations

Davit-launched lifeboats	Manufacturer: _____ Model: _____ Lot/Serial Number: _____	Date: _____ Time: _____ Surveyor: _____ Organization: _____

4.4.8.2 Fire test (1 of 3)		**Regulations: LSA Code 4.9.1; MSC.81(70) 1/ 6.16.1/2/3/4/4.1/4.2/4.3/7**
Test Procedure	Acceptance Criteria	Significant Test Data
The lifeboat should be moored in the centre of an area which is not less than five times the maximum projected plan area of the lifeboat. Sufficient kerosene should be floated on the water within the area so that when ignited it will sustain a fire, which completely envelops the lifeboat for 8 min. The boundary of the area should be capable of completely retaining the fuel. The engine should be run at full speed; however, the propeller need not be turning. The gas and fire-protective systems should be in operation throughout the fire test. The kerosene should be ignited. It should continue to burn and envelop the lifeboat for 8 min. During the fire test, the temperature should be measured and recorded as a minimum at the following locations: .1 at not less than 10 positions on the inside surface of the lifeboat; .2 at not less than five positions inside the lifeboat at locations normally taken by occupants and away from the inside surface; and .3 on the external surface of the lifeboat. The positions of such temperature recorders should be to the satisfaction of the Administration. The method of temperature measurement should allow the maximum temperature to be recorded.	At the conclusion of the fire test, the condition of the lifeboat should be such that it could continue to be used in the fully loaded condition.	Temperatures inside surface of the lifeboat: 1 _____ 6 _____ 2 _____ 7 _____ 3 _____ 8 _____ 4 _____ 9 _____ 5 _____ 10 _____ Temperatures inside the lifeboat at locations normally taken by occupants and away from the inside surface: 11 _____ 12 _____ 13 _____ 14 _____ 15 _____ Temperature on the external surface Comments/Observations

Davit-launched lifeboats	Manufacturer: _____ Model: _____ Lot/Serial Number: _____	Date: _____ Time: _____ Surveyor: _____ Organization: _____

4.4.8.2 Fire test (2 of 3)		**Regulations: LSA Code 4.9.1; MSC.81(70) 1/ 6.16.5**
Test Procedure	Acceptance Criteria	Significant Test Data
The atmosphere inside the lifeboat should be continuously sampled and representative retained samples should be analysed for the presence and quantity of essential, toxic, and injurious gases or substances. The analysis should cover the range of anticipated gases or substances that may be produced and which can vary according to the materials and fabrication techniques used to manufacture the lifeboat.	The analysis of gases should indicate that there is sufficient oxygen and no dangerous levels of toxic or injurious gases or substances.	Analysis of gases Gas Level Acceptable Oxygen _____ Passed ___ Failed ___ _____ _____ Passed ___ Failed ___ _____ _____ Passed ___ Failed ___ _____ _____ Passed ___ Failed ___ _____ _____ Passed ___ Failed ___ _____ _____ Passed ___ Failed ___ _____ _____ Passed ___ Failed ___ _____ _____ Passed ___ Failed ___ _____ _____ Passed ___ Failed ___ _____ _____ Passed ___ Failed ___ _____ _____ Passed ___ Failed ___ Comments/Observations Comments/Observations

Davit-launched lifeboats	Manufacturer: _____ Model: _____ Lot/Serial Number: _____	Date: _____ Time: _____ Surveyor: _____ Organization: _____

4.4.8.2 Fire test (3 of 3)	**Regulations: LSA Code 4.9.1; MSC.81(70) 1/ 6.16.6/7**	
Test Procedure	Acceptance Criteria	Significant Test Data
The pressure inside the lifeboat should be continuously recorded to confirm that a positive pressure is being maintained inside the lifeboat. The protective system should be as effective as that of the lifeboat tested. The water delivery rate and film thickness at various locations around the hull and canopy should be equal to or exceed the measurements made on the lifeboat originally fire tested. *Note*: The Administration may waive this test for any totally enclosed lifeboat which is identical in construction to another lifeboat which has successfully completed this test, provided the lifeboat differs only in size, and retains essentially the same form.	A positive pressure should be maintained inside the lifeboat.	Internal pressure range Min.____ Max. ___ Passed_____ Failed _____ Comments/Observations Reference to previous test, if applicable;

Davit-launched lifeboats	Manufacturer: _____ Model: _____ Lot/Serial Number: _____	Date: _____ Time: _____ Surveyor: _____ Organization: _____

4.4.8.3 Water spray test		**Regulations: LSA Code 4.9.2/2.1/2.2/2.3; MSC.81(70) 1 / 6.16.8/8.1/8.2/9/10**
Test Procedure	Acceptance Criteria	Significant Test Data
Start the engine and the spray pump. With the engine running at its designed output, the following should be measured to obtain the rated value and speed: .1 the rpm of the engine and the pump to obtain the rated speed; .2 the pressure at the suction and delivery side of the pump to obtain the rated water pressure. With the lifeboat in an upright position, on an even keel and in the light condition, run the pump at the rated speed. Measure the delivery rate of water or the thickness of the sprayed water film at the external surface of the lifeboat. Successively trim the lifeboat 5° by the head and 5° by the stern, and heel it 5° to port and 5° to starboard.	Water for the system should be drawn from the sea by a self-priming motor pump. It should be possible to turn "on" and turn "off" the flow of water over the exterior of the lifeboat. The seawater intake should be so arranged as to prevent the intake of flammable liquids from the sea surface. The system should be arranged for flushing with fresh water and allowing complete drainage. The delivery rate of water or the sprayed water film thickness over the lifeboat should be to the satisfaction of the Administration. In each condition the sprayed water film should cover the whole surface of the lifeboat.	Engine RPM: _____ Pump RPM: _____ Delivery Pressure: _____ Pa Film Thickness acceptable:_____ Y/N? Delivery Rate acceptable: ____ Y/N? Rate recorded _____ L/h Trim or Heel Water Film Covering Surface 5° Head Passed _____ Failed _____ 5° Stern Passed _____ Failed _____ 5° Port Passed _____ Failed _____ 5° Starboard Passed _____ Failed _____ Comments/Observations

Davit-launched lifeboats	Manufacturer: _____ Model: _____ Lot/Serial Number: _____	Date: _____ Time: _____ Surveyor: _____ Organization: _____

4.4.9.1 Canopy closure test		**Regulations: LSA Code 4.5.2.2; MSC.81(70) 1/ 6.13.1/2**
Test Procedure	Acceptance Criteria	Significant Test Data
This test is required only for partially enclosed lifeboats. During the test the lifeboat should be loaded with the number of persons for which it is to be approved. It should be demonstrated that the canopy can be easily erected by not more than two persons.	The canopy can be easily erected by not more than two persons.	Passed: _____ Failed: _____ Comments/Observations

4.5 FREE-FALL LIFEBOATS

EVALUATION AND TEST REPORT

4.5.0 General Information
- 4.5.0.1 General data and specifications
- 4.5.0.2 Submitted drawings, reports and documents
- 4.5.0.3 Quality assurance

4.5.1 Visual inspection
- 4.5.1.1 Occupant space
- 4.5.1.2 Fittings, provisions and ladders
- 4.5.1.3 Engine and starting system
- 4.5.1.4 Steering mechanism
- 4.5.1.5 Release mechanism

4.5.2 Freeboard, stability and self-righting tests
- 4.5.2.1 Flooded stability test
- 4.5.2.2 Freeboard test
- 4.5.2.3 Self-righting test
- 4.5.2.4 Flooded capsizing test

4.5.3 Seating strength and space tests
- 4.5.3.1 Seating strength test
- 4.5.3.2 Seating space test

4.5.4 Release mechanism tests
- 4.5.4.1 Release test
- 4.5.4.2 Load test

4.5.5 Operational tests
- 4.5.5.1 Manoeuvering
- 4.5.5.2 Liferaft towing
- 4.5.5.3 Endurance, speed and fuel compensation
- 4.5.5.4 Engine out of water
- 4.5.5.5 Compass test
- 4.5.5.6 Helpless person recovery

4.5.6 Towing test

4.5.7 Strength tests
- 4.5.7.1 Free-fall tests
- 4.5.7.2 Overload test

4.5.8 Additional tests for fire-protected lifeboats
- 4.5.8.1 Air supply test
- 4.5.8.2 Fire test
- 4.5.8.3 Water spray test

4.5 FREE-FALL LIFEBOATS

EVALUATION AND TEST REPORT

Manufacturer	
Date	
Type	
Place	
Name Surveyor printed	
Signature	
Approving Organization	

Free-fall lifeboats	Manufacturer: _____ Model: _____ Lot/Serial Number: _____	Date: _____ Time: _____ Surveyor: _____ Organization: _____

4.5.0.1 General data and specifications		**Regulations: LSA Code 4.4, 4.5, 4.6, 4.8 & 4.9**
General Information	Lifeboat Dimensions	Lifeboat Weight
Construction Material: Hull: Canopy: Lifeboat Inherent Buoyancy Material: Weight: Volume: Engine Installed: Manufacturer: Type: Power: Gear Ratio: Propeller: Release Mechanism: Manufacturer: Type: SWL: Service: Cargo only Occupancy (150 max.): Persons (82.5 kg each):	**Molded Dimensions:** Length: Breadth: Depth: Free-Fall Certification Characteristics: Free-Fall Height: _____ Launch Angle: ___ Minimum ramp length:_____ Tested angle of list, if exceeding 20°:	Design Weight: Unloaded Boat: Loose Equipment: Food: Water: Fuel: Persons: Calculated Loaded Weight: Fully Equipped: With Persons: Weight As Tested: Fully Equipped: Comments/Observations Passed: _____ Failed: _____

Free-fall lifeboats	Manufacturer: _____ Model: _____ Lot/Serial Number: _____	Date: _____ Time: _____ Surveyor: _____ Organization: _____

4.5.0.2 Submitted drawings, reports and documents

Submitted drawings and documents			**Status**
Drawing No.	**Revision No. & date**	**Title of drawing**	

Submitted reports and documents			**Status**
Report/Document No.	**Revision No. & date**	**Title of report/document**	
		Maintenance Manual -	
		Operations Manual -	

Free-fall lifeboats	Manufacturer: _____ Model: _____ Lot/Serial Number: _____	Date: _____ Time: _____ Surveyor: _____ Organization: _____

4.5.0.3 Quality assurance	**Regulations: MSC.81(70) 2/1.1,1.2**
Except where all appliances of a particular type are required by chapter III of the International Convention for the Safety of Life at Sea, 1974, as amended, or the International Life-Saving Appliance (LSA) Code to be inspected, representatives of the Administration should make random inspections of manufacturers to ensure that the quality of life-saving appliances and materials used comply with the specification of the approved prototype life-saving appliance. Manufacturers should be required to institute a quality control procedure to ensure that life-saving appliances are produced to the same standard as the prototype life-saving appliance approved by the Administration and to keep records of any production tests carried out in accordance with the Administration's instructions.	Quality assurance Standard Used: _____ Quality assurance Procedure: _____ Quality assurance Manual: _____ Description of System: Quality assurance System acceptable? Yes/No Comments/Observations:

Free-fall lifeboats	Manufacturer: _____ Model: _____ Lot/Serial Number: _____	Date: _____ Time: _____ Surveyor: _____ Organization: _____

4.5.1.1 Occupant space	**Regulations: LSA Code 4.4.1.8, 4.4.2.2/3, 4.4.3.5**	
Test Procedure	Acceptance Criteria	Significant Test Data
Visually inspect the lifeboat. Conduct measurements and verify clearances as required.	**Interior Floor to Canopy Height** Over 50% of the floor area the height should be not less than 1.3 m for lifeboats carrying 9 or fever persons and 1.7 m for lifeboats carrying 24 or more persons. Linear interpolation for occupancy between 9 and 24 persons is permitted.	Height: _____ m
	Seating Space Width – at least 480 mm Free clearance in front of the backrest at least 650 mm The backrest should extend at least 1075 mm above the seat pan.	Typical: Width: _____ mm Free clearance:_____mm Extend of backrest:_____mm Number of seats provided:
	Walkway Surfaces The surfaces on which persons might walk should have a non-skid finish.	Non-Skid Surface: Passed: ____Failed: ____ Comments/Observations Passed: ____Failed: ____

Free-fall lifeboats	Manufacturer: _____ Model: _____ Lot/Serial Number: _____	Date: _____ Time: _____ Surveyor: _____ Organization: _____

4.5.1.2 Fittings, provisions and ladders (1 of 2)	**Regulations: LSA Code 4.4.7.3/5/8/10/11/12, 4.4.8.25**	
Test Procedure	Acceptance Criteria	Significant Test Data
Visually inspect the lifeboat. Conduct measurements and verify clearances as required.	**Fittings and Provisions** .1 Suitable handholds or buoyant lifeline becketed around the lifeboat above the waterline and within reach of a person in the water, except in the vicinity of the rudder and propeller. .2 Sufficient watertight lockers, compartments or arrangements to provide for storage of the small items of equipment water and provision. .3 Means provided for collecting rainwater. .4 Means provided for storing collected water. .5 Means provided for siting and securing antenna in operating position (if required). .6 Approved position-indicating lights light with 12 h capacity provided. .7 Approved light with 12 h capacity sufficient for reading provided inside. .8 Adequate view on all sides for safe launching and maneuvering. .9 Provided with a manual pump suitable for effective bailing or be automatically self-bailing. .10 Windows or translucent panels to make artificial light unnecessary in daylight.	.1 Passed_____ Failed _____ .2 Passed_____ Failed _____ Not Applicable .3 Passed_____ Failed _____ .4 Passed_____ Failed _____ .5 Passed_____ Failed _____ .6 Passed_____ Failed _____ .7 Passed_____ Failed _____ .8 Passed_____ Failed _____ .9 Passed_____ Failed _____ .10 Passed_____ Failed _____ Comments/Observations

Free-fall lifeboats	Manufacturer: _____ Model: _____ Lot/Serial Number: _____	Date: _____ Time: _____ Surveyor: _____ Organization: _____

4.5.1.2 Fittings, provisions and ladders (2 of 2)	**Regulations: LSA Code 4.4.3.3, 4.4.4, 4.6.2.1/2/4/7/8/9/10, 4.6.3.1**	
Test Procedure	Acceptance Criteria	Significant Test Data
	Exterior of the of the lifeboat enclosure (i.e., canopy) is of a highly visible color and its interior of a color, which does not cause discomfort to the occupants.	Colour of canopy:_____ Colour of hull:_____ Colour of interior:_____
	Handrails for persons moving about exterior of lifeboat and to aid embarkation and disembarkation The enclosures should be so arranged that:	Passed: _____ Failed: _____
	.1 access to the lifeboat is provided by hatches which can be closed to make the lifeboat watertight; 1.1 access hatches can be opened and closed from both inside and outside the lifeboat. 1.2 access hatches have means to hold them securely in the open position. .2 persons have access to their seats from an entrance without having to climb over thwarts or other obstructions;	Passed: _____ Failed: _____
	Each seat is fitted with a safety harness.	Passed: _____ Failed: _____
	The adjacent safety harnesses are to be of contrasting color.	Passed: _____ Failed: _____
	Lifeboat Ladders Ladders that can be used at any boarding entrance should be on board and the lowest step when in place should not be less than 0.4 m below the light waterline.	Passed: _____ Failed: _____
	Other Provisions No buoyant material should be installed external to the hull of the lifeboat except in addition to buoyant material required to float the flooded lifeboat.	Passed: _____ Failed: _____
		Comments/Observations

Free-fall lifeboats	Manufacturer: _____ Model: _____ Lot/Serial Number: _____	Date: _____ Time: _____ Surveyor: _____ Organization: _____

4.5.1.3 Engine and starting system		**Regulations: LSA Code 4.4.6.2, 4.4.6.5/6/7/9/11/12, 4.6.4.1/3**
Test Procedure	Acceptance Criteria	Significant Test Data
Visually inspect the lifeboat. Conduct measurements and verify clearances as required.	Type of starting system	Manual/ Power
	.1 Two independent rechargeable energy sources available for power starting systems	YES/NO/NOT APPLICABLE
	.2 Any required starting aids provided	Passed: _____ Failed: _____
	.3 Starting system is not impeded by engine casing, thwarts, or other obstructions	Passed: _____ Failed: _____
	.4 Propeller arranged to be disengaged from the engine	Passed: _____ Failed: _____
	.5 Provision for ahead and astern propulsion	Passed: _____ Failed: _____
	.6 Exhaust arranged to prevent water from entering engine in normal operation	Passed: _____ Failed: _____
	.7 The lifeboat is designed with due regard to the safety of persons in the water and to the possibility of damage to the propulsion system by floating debris	Passed: _____ Failed: _____
	.8 Engine casing made of fire-retardant material or other suitable	
	.9 Arrangements providing similar protection	Fire retardant materials used: _____
	.10 Personnel are protected from hot and moving parts	Passed: _____ Failed: _____
	.11 Shouted order can be heard with engine running at speed necessary for 6 knot operation	Passed: _____ Failed: _____ Passed: _____ Failed: _____
	.12 Watertight casing around bottom and sides of starter batteries with a tightly fitting top which provides for necessary gas venting	Passed: _____ Failed: _____
	.13 Means for recharging engine starting, radio, and searchlight batteries provided by solar charge or ships power supply	Passed: _____ Failed: _____
	.14 Radio batteries not used to provide power for engine starting	
	.15 Recharging means provided for lifeboat batteries (not exceeding 50 V) from ship's power supply can be disconnected at the lifeboat embarkation station	Passed: _____ Failed: _____ Passed: _____ Failed: _____
	.16 Instructions for starting and operating engine are water resistant and mounted in a conspicuous place near the engine starting controls batteries with a tightly fitting top which provides for necessary gas venting	Passed: _____ Failed: _____ Comments/Observations

Free-fall lifeboats	Manufacturer: _____ Model: _____ Lot/Serial Number: _____	Date: _____ Time: _____ Surveyor: _____ Organization: _____

4.5.1.4 Steering mechanism	**Regulations: LSA Code 4.4.7.2**	
Test Procedure	Acceptance Criteria	Significant Test Data
Visually inspect the lifeboat. Conduct measurements and verify clearances as required.	• Air-cooled engines have a duct system to take in cooling air from, and exhaust it to, the outside of the lifeboat. • Manually operated dampers provided to enable cooling air to be taken in from, and exhausted to, the interior of the lifeboat. • A tiller should be capable of controlling the rudder. • Rudder permanently attached to the lifeboat. • Except when remote steering is provided, the tiller is permanently attached or linked to the rudder stock. • Rudder and tiller arranged so as not to be damaged by operation of the release mechanism or propeller.	Passed: _____ Failed: _____ Passed: _____ Failed: _____ Passed: _____ Failed: _____ Passed: _____ Failed: _____ Passed: _____ Failed: _____ Comments/Observations

Free-fall lifeboats	Manufacturer: _____ Model: _____ Lot/Serial Number: _____	Date: _____ Time: _____ Surveyor: _____ Organization: _____

4.5.1.5 Release mechanism	**Regulations: LSA Code 4.7.6.1/3/4**	
Test Procedure	Acceptance Criteria	Significant Test Data
Visually inspect the lifeboat. Conduct measurements and verify clearances as required.	General • Has two independent activation systems for the release mechanism which may only be operated from the inside the lifeboat. • Release control marked in a color that contrasts with the surroundings. • Release capability is adequately protected against accidental and premature use. • Designed to test the release system without launching the lifeboat.	Passed: _____ Failed: _____ Passed: _____ Failed: _____ Passed: _____ Failed: _____ Passed: _____ Failed: _____ Comments/Observations

Free-fall lifeboats	Manufacturer: _____ Model: _____ Lot/Serial Number: _____	Date: _____ Time: _____ Surveyor: _____ Organization: _____

4.5.2.1 Flooded stability test	**Regulations: LSA Code 4.4.1.1, 4.6.3.3; MSC.81(70) 1/6.8.1, 6.8.2, 6.8.3**	
Test Procedure	Acceptance Criteria	Significant Test Data
The lifeboat should be loaded with its equipment. If provision lockers, water tanks and fuel tanks cannot be removed, they should be flooded or filled to the final waterline resulting from this test. Lifeboats fitted with watertight stowage compartments to accommodate individual drinking water containers should have these containers aboard and placed in the stowage compartments, which should be sealed watertight during the flooding tests. Ballast of equivalent weight and density should be substituted for the engine and any other installed equipment that can be damaged by water. Weights representing persons who would be in the water when the lifeboat is flooded (water level more than 500 mm above the seat pan) may be omitted. Weights representing persons who would not be in the water when the lifeboat is flooded (water level less than 500 mm above seat pan) should be placed in the normal seating positions of such persons with their centre of gravity approximately 300 mm above the seat pan. Weights representing persons who would be partly submerged in the water when the lifeboat is flooded (water level between 0 and 500 mm above the seat pan) should additionally have an approximate density of 1 kg/dm³ (for example water ballast containers) to represent a volume similar to a human body. *Note*: Several tests may have to be conducted if holes in different areas would create different flooding conditions.	The lifeboat should have positive stability when filled with water to represent flooding which would occur when the lifeboat is holed in any one location below the waterline assuming no loss of buoyancy material and no other damage. The water level measured along each seatback in stable flooded condition is not more than 500 mm above the seat pan at any occupant seating position.	Passed: _____ Failed: _____ Max water level above seat pan: _____ mm Passed (Y/N): _____ Comments/Observations

Free-fall lifeboats	Manufacturer: _____ Model: _____ Lot/Serial Number: _____	Date: _____ Time: _____ Surveyor: _____ Organization: _____

4.5.2.2 Freeboard test	**Regulations: LSA Code 4.4.5.1/2.1/2; MSC.81(70) 1/ 6.8.4/5**	
Test Procedure	Acceptance Criteria	Significant Test Data
The lifeboat with its engine should be loaded with a mass equal to that of all the equipment. One half of the number of persons for which the lifeboat is to be approved should be seated in a proper seating position on one side of the centreline. The freeboard should then be measured on the low side.	Each lifeboat with side openings near the gunwale should have a freeboard measured from the waterline to the lowest opening through which the lifeboat may become flooded, of at least 1.5% of the lifeboat's length or 100 mm, whichever is the greater; and Each lifeboat without side openings near the gunwale should not exceed an angle of heel of 20° and should have a freeboard, measured from the waterline to the lowest opening through which the lifeboat may become flooded, of at least 1.5% of the lifeboats length or 100 mm, whichever is the greater.	Measured Freeboard: _____ mm 1.5% of Boat's Length:_____mm Angle of heel, if applicable:_____Deg. Passed: _____ Failed: _____ Comments/Observations

Free-fall lifeboats	Manufacturer: _____ Model: _____ Lot/Serial Number: _____	Date: _____ Time: _____ Surveyor: _____ Organization: _____

4.5.2.3 Self-righting test		**Regulations: LSA Code 4.6.3.2/4, 4.6.4.2; MSC.81(70) 1/6.14.1/1.1/1.2/2/2.1/2.2**
Test Procedure	Acceptance Criteria	Significant Test Data
A suitable means should be provided to rotate the lifeboat about a longitudinal axis to any angle of heel and then release it. The lifeboat, in the enclosed condition, should be incrementally rotated to angles of heel up to and including 180° and should be released. These tests should be conducted in the following conditions of load: .1 when the lifeboat with its engine is loaded in the normal position with properly secured weights representing the fully equipped lifeboat with a full complement of persons on board. The weight used to represent each person, assumed to have an average mass of 82.5 kg, should be secured at each seat location and have its centre of gravity approximately 300 mm above the seat pan so as to have the same effect on stability as when the lifeboat is loaded with the number of persons for which it is to be approved; and .2 when the lifeboat is in the light condition.	After release, the lifeboat should always return to the upright position without the assistance of the occupants. At the beginning of these tests, the engine should be running in neutral position and: .1 unless arranged to stop automatically when inverted, the engine should continue to run when inverted and for 30 min after the lifeboat has returned to the upright position; and .2 if the engine is arranged to stop automatically when inverted, it should be easily restarted and run for 30 min after the lifeboat has returned to the upright position. Water does not enter the engine.	Loaded: Passed: _____ Failed: _____ <u>Light:</u> Passed: _____ Failed: _____ Passed: _____ Failed: _____ Passed: _____ Failed: _____ Comments/Observations Passed: _____ Failed: _____

Free-fall lifeboats	Manufacturer: _____ Model: _____ Lot/Serial Number: _____	Date: _____ Time: _____ Surveyor: _____ Organization: _____

4.5.2.4 Flooded capsizing test		**Regulations: LSA Code 4.4.1.1, 4.6.3.3; MSC.81(70) 1/ 6.14.3/4/5**
Test Procedure	Acceptance Criteria	Significant Test Data
The lifeboat should be placed in the water and fully flooded until the lifeboat can contain no additional water. All entrances and openings should be secured to remain open during the test. For the purpose of this test, the mass and distribution of the occupants may be disregarded. However, the equipment, or equivalent mass, should be secured in the lifeboat in the normal operating position. Using a suitable means, the lifeboat should be rotated about a longitudinal axis to a heel angle of 180° and then released.	After release, the lifeboat should attain a position that provides an above-water escape for the occupants. In case of totally enclosed lifeboats, water level measured along each seatback in stable flooded condition is not more than 500 mm above the seat pan at any occupant seating position.	Passed: _____ Failed: _____ Passed: _____ Failed: _____ Comments/Observations

Free-fall lifeboats	Manufacturer: _____ Model: _____ Lot/Serial Number: _____	Date: _____ Time: _____ Surveyor: _____ Organization: _____

4.5.3.1 Seating strength test	**Regulations: LSA Code 4.4.1.5.3, 4.6.3.1; MSC.81(70) 1/ 6.6.2**	
Test Procedure	Acceptance Criteria	Significant Test Data
The seats experiencing the highest acceleration forces, and those seats which are supported in a manner different from the other seats in the lifeboat, should be loaded with a mass of 100 kg. The load should be arranged in the seat so that both the seatback and the seat pan are affected. This test may be conducted as part of the free-fall lifeboat overload test. For a totally enclosed lifeboat, the seat belts should be demonstrated to be capable of holding a person with a mass of 100 kg securely in place with the lifeboat in the capsized position. This test may be conducted in connection with the righting test.	The seating should be able to support this load during a free-fall launch from a height of 1.3 times the approved height without any permanent deformation or damage. The seat belts should hold a mass of 100 kg securely in place with the lifeboat in the capsized position.	Passed: _____ Failed: _____ Passed: _____ Failed: _____ Comments/Observations

Free-fall lifeboats	Manufacturer: _____ Model: _____ Lot/Serial Number: _____	Date: _____ Time: _____ Surveyor: _____ Organization: _____

4.5.3.2 Seating space test	**Regulations: LSA Code 4.4.2.2.1, 4.4.3.1/2; MSC.81(70) 1/6.7.1**	
Test Procedure	Acceptance Criteria	Significant Test Data
The lifeboat should be fitted with its engine and its equipment. The number of persons for which the lifeboat is to be approved, having an average mass of 82.5 kg and wearing a lifejacket and any other essential equipment should board the lifeboat as quickly as possible. The lifeboat should then be maneuvered and all equipment on board tested by an individual to demonstrate that the equipment can be operated without difficulty and without interference with the occupants.	The number of persons should be able to board the lifeboat and be properly seated within a period of 3 min in the case of a lifeboat intended for a cargo ship and as rapidly as possible in the case of a lifeboat intended for a passenger ship. The boat can be manoeuvered and the equipment can be operated without interference with the occupants.	Cargo Ship: Boarding Time:_____min Passed: _____ Failed: _____ Passed: _____ Failed: _____ SOLAS inherently buoyancy lifejacket worn: Yes/No Comments/Observations

4.5.4.1 Release test	**Regulations: LSA Code 4.7.6.2; MSC.81(70) 1/6.9.6**	
Test Procedure	Acceptance Criteria	Significant Test Data
The free-fall release mechanism should be loaded with a force equal to at least 200% of the normal load caused by the fully equipped lifeboat when loaded with the number of persons for which it is to be approved.	It should be demonstrated that the free-fall release mechanism should operate effectively when loaded as described in the procedure.	Passed: _____ Failed: _____ Comments/Observations

Free-fall lifeboats	Manufacturer: _____ Model: _____ Lot/Serial Number: _____	Date: _____ Time: _____ Surveyor: _____ Organization: _____

4.5.4.2 Load test		**Regulations: LSA Code 4.7.6.5; MSC.81(70) 1 /6.9.7**
Test Procedure	Acceptance Criteria	Significant Test Data
The release mechanism should be mounted on a tensile strength testing device. The load should be increased to at least six times the working load of the release mechanism. (Testing to failure is suggested, but not required.)	The release mechanism should not fail at load less than or equal to six times the working load. (If tested to failure, working load may be taken as1/6 the failure load.)	Working Load:_____N Force Applied:____N Passed: _____ Failed: _____ Comments/Observations

4.5.5.1 Manoeuvring		**Regulations: LSA Code 1.2.2.8; MSC.81(70) 1/ 6.10.1**
Test Procedure	Acceptance Criteria	Significant Test Data
The lifeboat should be loaded with weights equal to the mass of its equipment and the number of persons for which the lifeboat is to be approved. The engine should be started and the lifeboat manoeuvred for a period of at least 4 h to demonstrate satisfactory operation.	The lifeboat should manoeuvre and operate satisfactorily.	Passed: _____ Failed: _____ Comments/Observations

Free-fall lifeboats	Manufacturer: _____ Model: _____ Lot/Serial Number: _____	Date: _____ Time: _____ Surveyor: _____ Organization: _____

4.5.5.2 Liferaft towing	**Regulations: LSA Code 4.4.6.8; MSC.81(70) 1/ 6.10.1**	
Test Procedure	Acceptance Criteria	Significant Test Data
The lifeboat should be loaded with weights equal to the mass of its equipment and the number of persons for which the lifeboat is to be approved. The maximum towing force of the lifeboat should then be determined.	The lifeboat can successfully tow the liferaft as described in the procedure.	
This information should be used to determine the largest fully loaded liferaft the lifeboat can tow at 2 knots.	The maximum towing force of the lifeboat should be recorded on the type approval certificate.	Bollard Pull:_____N (to be recorded on the type approval certificate)
The fitting designated for towing other craft should be secured to a stationary object by a towrope. The engine should be operated ahead at full speed for a period of at least 2 minutes, and the towing force measured and recorded.	There should be no damage to the towing fitting or its supporting structure.	Passed: _____ Failed: _____ Comments/Observations

4.5.5.3 Endurance, speed and fuel consumption		**Regulations: LSA Code 4.4.6.8; MSC.81(70) 1/ 6.10.1**
Test Procedure	Acceptance Criteria	Significant Test Data
The lifeboat should be loaded with weights equal to the mass of its equipment and the number of persons for which the lifeboat is to be approved. The lifeboat should be run at a speed of not less than 6 knots for a period, which is sufficient to ascertain the fuel consumption and to establish that the fuel tank has the required capacity.	The speed of a lifeboat when proceeding ahead in calm water when loaded with its full complement of persons and equipment and with all engine-powered auxiliary equipment in operation, should be at least 6 knots. Sufficient fuel, suitable for use thought out the temperature ranged expected in the area in which the ship operates, should be provided to run the fully loaded lifeboat at 6 knots for a period of not less than 24 h.	Measured Speed (without spray system): _____knots Measured Speed (with spray system): knots Passed: _____ Failed: _____ Consumption:_____L/h Tank Capacity:_____L Endurance:_____hrs Sufficient tank capacity: Passed: _____ Failed: _____ Comments/Observations

4.5.5.4 Engine out of water		**Regulations: LSA Code 4.4.6.3; MSC.81(70) 1 / 6.10.5**
Test Procedure	Acceptance Criteria	Significant Test Data
The engine should be operated for at least 5 min at idling speed under conditions simulating normal storage.	The engine should not be damaged as a result of this test.	Passed: _____ Failed: _____ Normal storage angle tested:_____ _____deg. Comments/Observations

4.5.5.5 Compass test		**Regulations: LSA Code 4.4.8.5; MSC.81(70) 1/ 6.10.7**
Test Procedure	Acceptance Criteria	Significant Test Data
It should be determined that the compass performance is satisfactory and that it is not unduly affected by magnetic fittings and equipment in the lifeboat.	The compass operates satisfactorily.	Passed: _____ Failed: _____ Comments/Observations

4.5.5.6 Helpless person recovery		**Regulations: LSA Code 4.4.3.4; MSC.81(70) 1/ 6.10.8**
Test Procedure	Acceptance Criteria	Significant Test Data
It should be demonstrated by test that it is possible to bring helpless people on board the lifeboat from the sea.	Helpless people can be brought on board the lifeboat from the sea.	Passed: _____ Failed: _____ Comments/Observations
4.5.6 Towing test		**Regulations: LSA Code 4.4.7.7; MSC.81(70) 1/ 6.11.1**
Test Procedure	Acceptance Criteria	Significant Test Data
It should be demonstrated that the fully equipped lifeboat, loaded with a properly distributed mass equal to the mass of the number of persons for which it is to be approved, can be towed at a speed of not less than 5 knots in calm water and on an even keel.	The lifeboat should not exhibit unsafe or unstable characteristics. There should be no damage to the lifeboat or its equipment as a result of this test	Passed: _____ Failed: _____ Passed: _____ Failed: _____ Comments/Observations

Free-fall lifeboats	Manufacturer: _____ Model: _____ Lot/Serial Number: _____	Date: _____ Time: _____ Surveyor: _____ Organization: _____

4.5.7.1 Free-fall test (1 of 4)	**Regulations: LSA Code 4.7.5; MSC.81(70) 1/ 6.5.1/2/3/3.1/3.2/3.3/3.4/4/4.1/4.2/4.3, 6.17**	
Test Procedure	Acceptance Criteria	Significant Test Data
A lifeboat design for free-fall launching should be subjected to test launches conducted from the height at which the lifeboat is intended to be stowed taking into account conditions of unfavourable list and trim, unfavourable locations of the centre of gravity, and extreme conditions of load. During the free-fall launches required in this section, acceleration forces should be measured and the data evaluated in accordance with tables 2 and 3 at different locations in the lifeboat to determine the worst occupant exposure to acceleration taking into consideration the seating arrangement. The tests required in this section may be conducted with correctly scaled models that are at least 1m in length. As a minimum, the dimensions and mass of the lifeboat, the location of its centre of gravity, and its second moment of mass, must be scaled in a reasonable manner. Depending on the construction and behavior of the free-fall lifeboat, other parameters may also have to be reasonably scaled to effect correct behavior of the model. If models are used, sufficient full-scale tests should be conducted to verify the accuracy of the model measurements. (continued)	The free-fall tests required in this section should be considered acceptable if: .1 the acceleration is in compliance with the "Training" condition specified in tables 2 and 3 during the launch, free- fall, and subsequent water entry for those tests with the ship on even keel; .2 the acceleration forces are in compliance with the "Emergency" condition specified in tables 2 and 3 during the launch, free-fall, and subsequent water entry for those tests with the ship under unfavourable conditions of list and trim; and .3 the lifeboat makes positive headway immediately after water entry.	Complete data for this test are to be recorded on the form provided. Summary of Test Data: Free-Fall Height:__m Maximum CDRR:__N/A, OR Maximum CAR:_____N/A Was Model Used: YES NO Which Tests: _____ Model Scale: _____ Weight:__kg Radius of Gyration: **%** Loa Free-Fall Height:_____m Positive Headway: Pass___Fail Comments/Observations

Free-fall lifeboats	Manufacturer: _____ Model: _____ Lot/Serial Number: _____	Date: _____ Time: _____ Surveyor: _____ Organization: _____

4.5.7.1 Free-fall test (1 of 4) *continued*	**Regulations: LSA Code 4.7.5; MSC.81(70) 1/ 6.5.1/2/3/3.1/3.2/3.3/3.4/4/4.1/4.2/4.3, 6.17**	
Test Procedure	Acceptance Criteria	Significant Test Data
As a minimum, the following full-scale tests should be conducted with the ship on an even keel using the same type of launching arrangement as the production lifeboat and from the height for which the lifeboat is to be approved: .1 lifeboat fully loaded; .2 lifeboat loaded with its required equipment and minimum launching crew only; .3 lifeboat loaded with its required equipment and one half of the full complement of persons distributed in the forward half of the seating positions of the lifeboat; and .4 lifeboat loaded with its required equipment and one half of the full complement of persons seated in the after half of the seating positions of the lifeboat.		Comments/Observations

Free-fall lifeboats	Manufacturer: _____ Model: _____ Lot/Serial Number: _____	Date: _____ Time: _____ Surveyor: _____ Organization: _____

4.5.7.1 Free-fall test (2 of 4)	**Regulations: LSA Code 4.7.5; MSC.81(70) 1/ 6.17.1 to 6.17.14**
Measuring and Evaluating Acceleration Forces Selection, placement and mounting of accelerometers The accelerometers used to measure the acceleration forces in the lifeboat should: .1 have adequate frequency response for the test in which they are to be used but the frequency response should at least be in the range of 0 to 200 Hz; .2 have adequate capacity for the acceleration forces that will occur during the tests; and .3 have an accuracy of ±5%. Accelerometers should be placed in the lifeboat, parallel to the principal axes of the lifeboat, at those locations necessary to determine the worst occupant exposure to acceleration. The accelerometers should be mounted on a rigid part of the interior of the lifeboat in a manner to minimize vibration and slipping. A sufficient number of accelerometers should be used at each location at which acceleration forces are measured so that all likely acceleration forces at that location can be measured. The selection, placement, and mounting of the accelerometers should be to the satisfaction of the Administration. **Recording method and rate** The measured acceleration forces may be recorded on magnetic media as either an analog or a digital signal or a paper plot of the acceleration signal may be produced. If acceleration forces are to be recorded and stored as a digital signal, the sampling rate should be at least 500 samples per second. Whenever an analogue acceleration signal is converted to a digital signal, the sampling rate should be at least 500 samples per second.	**Evaluation with the dynamic response model** The dynamic response model is the preferred method to evaluate potential for the occupant in a lifeboat to be injured by exposure to acceleration forces. In the dynamic response model, the human body is idealized as a single-degree-of-freedom, spring-mass acting in each coordinate direction as shown in figure 1. The response of the body mass relative to the seat support, which is excited by the measured accelerations, can be evaluated using a procedure acceptable to the Administration. The parameters to be used in the analysis are shown in table 1 for each coordinate direction. Before performing the dynamic response analysis, the measured accelerations should be oriented to the primary axes of the seat. The desired outcome from the dynamic response analysis is the displacement time-history of the body mass relative to the seat support in each coordinate direction. At all times, the following expression should be satisfied: $$CDRR = \sqrt{\left(\frac{d_x}{S_x}\right)^2 + \left(\frac{d_y}{S_y}\right)^2 + \left(\frac{d_z}{S_z}\right)^2} \leq 1$$ where d_x, d_y and d_z are the concurrent relative displacements of body mass with respect to the seat support, in the x, y and z body axes, as computed from the dynamic response analysis and S_x, S_y, and S_z, are relative displacements which are presented in table 2 for the appropriate launch condition. **Evaluation using the SRSS method** In lieu of the evaluation with the dynamic response model, the potential for an occupant in a lifeboat to become injured by an acceleration can be evaluated using the SRSS method. Before performing the SRSS analysis, the measured accelerations should be oriented to the primary axes of the seat.

Free-fall lifeboats	Manufacturer: _____ Model: _____ Lot/Serial Number: _____	Date: _____ Time: _____ Surveyor: _____ Organization: _____

4.5.7.1 Free-fall test (3 of 4)

Regulations: LSA Code 4.7.5; MSC.81(70) 1/ 6.17.9 to 6.17.17

Figure 1 – Independent Single Degree-of-Freedom Representation of the Human Body

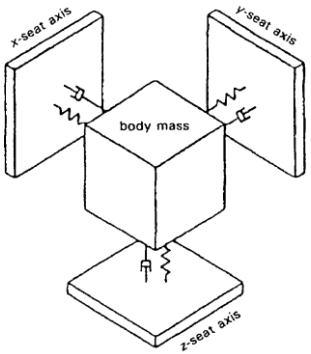

Table 1 – Parameters of the Dynamic Response Model

Coordinate Axis	Natural Frequency (rad/s)	Damping Ratio
X	62.8	0.100
Y	58.0	0.090
Z	52.9	0.224

Table 2 – Suggested Displacements Limits for Lifeboats

Acceleration direction	Displacement (cm) Training	Emergency
+X = Eyeballs In	6.96	8.71
-X = Eyeballs Out	6.96	8.71
+Y = Eyeballs Right	4.09	4.95
-Y = Eyeballs Left	4.09	4.95
+Z = Eyeballs Down	5.33	6.33
-Z = Eyeballs Up	3.15	4.22

Full-scale acceleration data should be filtered with no less than the equivalent of a 20 Hz low-pass filter. Any filtering procedure acceptable to the Administration may be used.

Acceleration data measured on a model should be filtered with a low-pass filter having a frequency not less than that obtained with the following expression:

$$f_{model} = \frac{20}{\sqrt{\frac{L_{model}}{L_{prototype}}}}$$

Where f_{model} is the frequency of the filter to be used, L_{model} is the length of the model lifeboat, and $L_{prototype}$ is the length of the prototype lifeboat.

At all times, the following expression should be satisfied:

$$CAR = \sqrt{\left(\frac{g_x}{G_x}\right)^2 + \left(\frac{g_y}{G_y}\right)^2 + \left(\frac{g_z}{G_z}\right)^2} \leq 1$$

where g_X, g_Y, and g_Z are the concurrent accelerations in the x, y and z seat axes, and G_X, G_Y, and G_Z are allowable accelerations, which are presented in table 3 for the appropriate launch condition.

Table 3 – SRSS Acceleration Limits for Lifeboats

Acceleration direction	Acceleration Training	Emergency
+X = Eyeballs In	15.0	18.0
-X = Eyeballs Out	15.0	18.0
+Y = Eyeballs Right	7.0	7.0
-Y = Eyeballs Left	7.0	7.0
+Z = Eyeballs Down	7.0	7.0
-Z = Eyeballs Up	7.0	7.0

Free-fall lifeboats	Manufacturer: _____ Model: _____ Lot/Serial Number: _____	Date: _____ Time: _____ Surveyor: _____ Organization: _____

4.5.7.1 Free-fall test (4 of 4)						**Regulations: LSA Code 4.7.5; MSC.81(70) I/ 6.17.9/12/13/14/15/16/17**					
Launch	Load	List/Trim	CDRR	CAR	Headway	Launch	Load	List/Trim	CDRR	CAR	Headway
Full 1	Total	0/0				5	50% Fwd	20/+10 *			
Full 2	50% Fwd	0/0				6	50% Fwd	20/-10 *			
Full 3	50% Aft	0/0				7	50% Aft	0/0			
Full 4	Op Crew	0/0				8	50% Aft	20/+10 *			
1	Total	0/0				9	50% Aft	20/-10 *			
2	Total	20/+10 *				10	Op Crew	0/0			
3	Total	20/-10 *				11	Op Crew	20/+10 *			
4	50% Fwd	0/0				12	Op Crew	20/-10 *			

* If the free fall lifeboat is tested to larger angle of list than the SOLAS minimum requirement (20°): Tested list:_

Comments/Observations

NOTE: Tests Full-1, Full-2, Full-3, and Full-4 must be conducted with the full-scale lifeboat. The other tests can be conducted either with a properly constructed model or with the full-scale lifeboat

Free-fall lifeboats	Manufacturer: _____ Model: _____ Lot/Serial Number: _____	Date: _____ Time: _____ Surveyor: _____ Organization: _____

4.5.7.2 Overload test		**Regulations: LSA Code 4.7.4; MSC.81(70) 1/ 6.3.7/8/9, 6.10**
Test Procedure	Acceptance Criteria	Significant Test Data
It should be demonstrated that the lifeboat has sufficient strength to withstand the forces acting upon it when loaded with a distributed mass equal to the mass of the number of persons for which it is to be approved and its equipment when free-fall launched from a height of 1.3 times the height for which it is to be approved. If the lifeboat is normally ramp-launched, and a ramp is not available, this test may be conducted by dropping the lifeboat vertically with the keel at the same angle that normally occurs during water entry. After this test the lifeboat should be unloaded, cleaned and carefully examined to detect the position and extent of damage that may have occurred as a result of this test. An operational test should then be conducted in accordance with 4.6.5.3. After this test the lifeboat should again be unloaded, cleaned, and inspected for possible damage.	This test should be considered successful if the lifeboat passes the operational test to the satisfaction of the Administration; no damage has been sustained that would affect the lifeboat's efficient functioning; and any deflections of the hull or canopy as measured during the test would not cause injury to lifeboat occupants.	Passed: _____ Failed: _____ Comments/Observations

Free-fall lifeboats	Manufacturer: _____ Model: _____ Lot/Serial Number: _____	Date: _____ Time: _____ Surveyor: _____ Organization: _____

4.5.8.1 Air supply test		**Regulations: LSA Code 4.8; MSC.81(70) 1/ 6.15**
Test Procedure	Acceptance Criteria	Significant Test Data
All entrances and openings of the lifeboat should be closed, and the air supply to the inside of the lifeboat turned on to the design air pressure. The engine should then be run at revolutions necessary to achieve full speed with the fully loaded boat including all persons and with the sprinkler system in use for a period of 5 min, stopped for 30 s, then restarted for a total running time of 10 min.	During the 10-minute running time, the atmospheric pressure within the enclosure should be continuously monitored to ascertain that a small positive air pressure is maintained within the lifeboat and to confirm that noxious gases cannot enter. The internal air pressure should never fall below the outside atmospheric pressure, nor should it exceed outside atmospheric pressure by more than 20 hPa during the test. It should be ascertained, by starting the engine with air supply turned off, that when the air supply is depleted, automatic means are activated to prevent a dangerous underpressure of more than 20 hPa being developed within the lifeboat. The system should have visual indicators to indicate the pressure of the air supply at all times.	Test duration with positive air pressure:_____ _____min Engine stopped; Overpressure:_____ _____hPa Air supply depleted; Underpressure:__ _____hPa Passed: _____ Failed: _____ Passed: _____ Failed: _____ Air System:_____ engine rev at test: _____rpm Nominal max. pressure:_____bar total air bottle volume: _____l Bottle pressure at start: _____bar Bottle pressure after 10 min _____bar Total required air volume= (Pressure at start-Pressure after 10') x total air bottle volume= _____ l Comments/Observations

Free-fall lifeboats	Manufacturer: _____ Model: _____ Lot/Serial Number: _____	Date: _____ Time: _____ Surveyor: _____ Organization: _____

4.5.8.2 Fire test (1 of 3)		**Regulations: LSA Code 4.9.1; MSC.81(70) 1/ 6.16.1/2/3/4/4.1/4.2/4.3/7**
Test Procedure	Acceptance Criteria	Significant Test Data
The lifeboat should be moored in the centre of an area which is not less than five times the maximum projected plan area of the lifeboat. Sufficient kerosene should be floated on the water within the area so that when ignited it will sustain a fire, which completely envelops the lifeboat for 8 min. The boundary of the area should be capable of completely retaining the fuel. The engine should be run at full speed; however, the propeller need not be turning. The gas and fire-protective systems should be in operation throughout the fire test. The kerosene should be ignited. It should continue to burn and envelop the lifeboat for 8 min. During the fire test, the temperature should be measured and recorded as a minimum at the following locations: .1 at no less than 10 positions on the inside surface of the lifeboat; .2 at not less than 5 positions inside the lifeboat at locations normally taken by occupants and away from the inside surface; and .3 on the external surface of the lifeboat. The positions of such temperature recorders should be to the satisfaction of the Administration. The method of temperature measurement should allow the maximum temperature to be recorded.	At the conclusion of the fire test, the condition of the lifeboat should be such that it could continue to be used in the fully loaded condition.	Temperatures inside surface of the lifeboat: 1 _____ 6 _____ 2 _____ 7 _____ 3 _____ 8 _____ 4 _____ 9 _____ 5 _____ 10 _____ Temperatures inside the lifeboat at locations normally taken by occupants and away from the inside surface: 11 _____ 12 _____ 13 _____ 14 _____ 15 _____ Temperature on the external surface Comments/Observations

Free-fall lifeboats	Manufacturer: _____ Model: _____ Lot/Serial Number: _____	Date: _____ Time: _____ Surveyor: _____ Organization: _____

4.5.8.2 Fire test (2 of 3)		**Regulations: LSA Code 4.9.1; MSC.81(70) 1 / 6.16.5**
Test Procedure	Acceptance Criteria	Significant Test Data
The atmosphere inside the lifeboat should be continuously sampled and representative retained samples should be analysed for the presence and quantity of essential, toxic, and injurious gases or substances. The analysis should cover the range of anticipated gases or substances that may be produced and which can vary according to the materials and fabrication techniques used to manufacture the lifeboat.	The analysis of gases should indicate that there is sufficient oxygen and no dangerous levels of toxic or injurious gases or substances.	Analysis of gasses Gas / Level / Acceptable Oxygen _____ Passed ___ Failed ___ _____ _____ Passed ___ Failed ___ _____ _____ Passed ___ Failed ___ _____ _____ Passed ___ Failed ___ _____ _____ Passed ___ Failed ___ _____ _____ Passed ___ Failed ___ _____ _____ Passed ___ Failed ___ _____ _____ Passed ___ Failed ___ _____ _____ Passed ___ Failed ___ _____ _____ Passed ___ Failed ___ _____ _____ Passed ___ Failed ___ Comments/Observations

Free-fall lifeboats	Manufacturer: _____ Model: _____ Lot/Serial Number: _____	Date: _____ Time: _____ Surveyor: _____ Organization: _____

4.5.8.2 Fire test (3 of 3)	**Regulations: LSA Code 4.9.1; MSC.81(70) 1/ 6.16.6/7**	
Test Procedure	Acceptance Criteria	Significant Test Data
The pressure inside the lifeboat should be continuously recorded to confirm that a positive pressure is being maintained inside the lifeboat. The protective system should be as effective as that of the lifeboat tested. The water delivery rate and film thickness at various locations around the hull and canopy should be equal to or exceed the measurements made on the lifeboat originally fire tested. *Note*: The Administration may waive this test for any totally enclosed lifeboat which is identical in construction to another lifeboat which has successfully completed this test, provided the lifeboat differs only in size, and retains essentially the same form.	A positive pressure should be maintained inside the lifeboat.	Internal pressure range Min.____ Max. ___ Passed: _____ Failed: _____ Comments/Observations Reference to previous test, if applicable;_____

Free-fall lifeboats	Manufacturer: _____ Model: _____ Lot/Serial Number: _____	Date: _____ Time: _____ Surveyor: _____ Organization: _____

4.5.8.3 Water spray test		**Regulations: LSA Code 4.9.2/2.1/2.2/2.3; MSC.81(70) 1/ 6.16.8/8.1/8.2/9/10**
Test Procedure	Acceptance Criteria	Significant Test Data
Start the engine and the spray pump. With the engine running at its designed output, the following should be measured to obtain the rated value and speed: .1 the rpm of the engine and the pump to obtain the rated speed; and .2 the pressure at the suction and delivery side of the pump to obtain the rated water pressure. With the lifeboat in an upright position, on an even keel and in the light condition, run the pump at the rated speed. Measure the delivery rate of water or the thickness of the sprayed water film at the external surface of the lifeboat. Successively trim the lifeboat 5° by the head and 5° by the stern, and heel it 5° to port and 5° to starboard.	Water for the system should be drawn from the sea by a self-priming motor pump. It should be possible to turn "on" and turn "off" the flow of water over the exterior of the lifeboat. The seawater intake should be so arranged as to prevent the intake of flammable liquids from the sea surface. The system should be arranged for flushing with fresh water and allowing complete drainage. The delivery rate of water or the sprayed water film thickness over the lifeboat should be to the satisfaction of the Administration. In each condition the sprayed water film should cover the whole surface of the lifeboat.	Engine RPM: _____ Pump RPM: _____ Suction Pressure:_Pa Delivery Pressure:_Pa Film Thickness:_____mm Delivery Rate:_____L/h Trim or Heel Water Film Covering Surface 5° Head Passed: _____ Failed: _____ 5° Stern Passed: _____ Failed: _____ 5° Port Passed: _____ Failed: _____ 5° Starboard Passed: _____ Failed: _____ Comments/Observations

_____