CHINA CLASSIFICATION SOCIETY

GUIDELINES FOR FATIGUE STRENGTH OF SHIP STRUCTURE

2021

Effective from 1 August 2021

Beijing

BRIEF EXPLANATION

The Guidelines for Fatigue Strength of Ship Structure (2021) are revised on the basis of the Guidelines for Fatigue Strength of Ship Structure (2018).

Main revisions are as follows:

1. Relevant contents of liquefied gas carriers are revised and improved in conjunction with the project “rules verification and in-depth research of liquefied gas carriers”, in accordance with market demand and technical development.
2. Correction of material strength is added for design stress range, and the interpolation method is added for web hot spot.
3. Weld improvement methods are added.
4. Other editorial revisions.

CONTENTS

CHAPTER 1 GENERAL 1
1.1 General provisions 1
1.2 Symbols 1
1.3 Definitions of fatigue assessment terms 3
1.4 Fatigue damage and failure mode 4
1.5 Fatigue assessment method 6
1.6 Corrosion correction 8
1.7 Loading conditions for fatigue assessment 8
1.8 Calculation conditions 12
CHAPTER 2 FATIGUE LOAD 13
2.1 General requirements 13
2.2 Parameter definitions 13
2.3 Ship motions and accelerations 14
2.4 Hull girder loads 17
2.5 Load cases 19
2.6 External pressure 21
2.7 Internal pressure of dry bulk cargo 27
2.8 Internal pressure of liquid 31
2.9 Loads of container cargo 32
2.10 Loads of vehicle carrier 33
2.11 Loads of gravity of liquefied gas carriers 33
CHAPTER 3 FATIGUE ASSESSMENT 34
3.1 General requirements 34
3.2 Guidance on design of hull structural details 34
3.3 Design stress range 34
3.4 Selection of design S-N curves 37
3.5 Calculation of fatigue cumulative damage 37
3.6 Calculation of fatigue life 38
3.7 Weld improvement methods 38
CHAPTER 4 SIMPLIFIED STRESS ANALYSIS 41
4.1 General requirements 41
4.2 Hot spot stress ranges and hot spot mean stress based on simplified analysis 41
4.3 Calculation of nominal stress components 41
4.4 Calculation of hot spot stress 44
4.5 Stress concentration factors 45
CHAPTER 5 FINITE ELEMENT STRESS ANALYSIS 52
5.1 General requirements 52
5.2 Structure modeling 52
5.3 Finite element analysis conditions 53
5.4 Boundary conditions 53
5.5 Hot spot stress ranges and hot spot mean stress based on finite element analysis 56

5.6 Requirements for finite elements of typical details 62
CHAPTER 6 FATIGUE STRENGTH OF PUMP TOWER 71
6.1 General provisions 71
6.2 Loading conditions and filling level 71
6.3 Ship sea-keeping analysis 72
6.4 Sloshing conditions 72
6.5 Finite element analysis of pump tower structure 73
6.6 Fatigue analysis 74
APPENDIX HULL STRUCTURAL DETAILS OF BULK CARRIERS, OIL TANKERS AND CONTAINER SHIPS 78

CHAPTER 1 GENERAL

1.1 General provisions

1.1.1 The Guidelines applies to strength assessment of hull structure in cargo hold areas of sea-going steel ships, including the following ship types:

(1) non-CSR bulk carriers of 150 m and over in length;

(2) non-CSR oil tankers of 150 m and over in length;

(3) container ships of 150 m and over in length;

(4) the following liquefied gas carriers of 150 m and over in length:

① membrane tank liquefied gas carriers;

② type A prismatic independent tank liquefied gas carriers (hereinafter referred to as type A liquefied gas carriers);

③ type B prismatic independent tank liquefied gas carriers (hereinafter referred to as type B liquefied gas carriers);

④ type C independent tank liquefied gas carriers (hereinafter referred to as type C liquefied gas carriers);

(5) integral tank chemical tankers of 150 m and over in length;

(6) ore carriers of 150 m and over in length;

(7) steel sea-going vehicle carriers specially designed and manufactured for carrying wheeled commercial vehicles.

1.1.2 For other ships, the fatigue strength of the hull structure may be assessed in accordance with the Guidelines.

1.1.3 For ships carrying out fatigue strength assessment in accordance with the requirements of the Guidelines, their structural design, construction workmanship and quality are to comply with the requirements of CCS Rules for Classification of Sea-going Steel Ships, Rules for Construction of Sea-going Ships Engaged on Domestic Voyages and other relevant standards accepted by CCS.

1.1.4 For independent tank liquefied gas carriers, the hull structure and type A/B prismatic independent tanks are to be subject to common fatigue strength assessment (i.e. P-M linear cumulative damage method based on the S-N curve) in accordance with the Guidelines, and type B independent tanks are also to be subject to fatigue strength assessment by the method of fracture mechanics in accordance with relevant requirements of CCS Rules for Construction and Equipment of Ships Carrying Liquefied Gases in Bulk. Type C independent tanks are to be subject to fatigue strength assessment in accordance with relevant requirements of CCS Rules for Construction and Equipment of Ships Carrying Liquefied Gases in Bulk (where applicable).

1.1.5 The class notation FL may be assigned to classed ships satisfying the assessment requirements of the Guidelines. Where a ship is designed for a minimum design fatigue life of 25 years or more, the class notation may be assigned at 5-year intervals starting from the 25th year, e.g. FL(25), FL(30), etc.

1.2 Symbols

1.2.1 **Length of ship *L*** (in m), i.e. the Rule length, is the distance measured on the waterline at the scantling draught from the forward side of the stem to the aft side of the rudder post, or to the centre of the rudder stock if there is no rudder post. *L* is not to be less than 96%, and need not be

greater than 97%, of the extreme length on the waterline at the scantling draught. In ships with unusual stern and bow arrangement, the length L is to be specially considered.

For pontoon hulls, L is the distance on the waterline at the scantling draught from the forward side of the fore end plate to the aft side of the aft end plate.

For ships without rudder stocks (such as ships provided with azimuth thrusters), L is 97% of the extreme length on the waterline at the scantling draught.

1.2.2 **Breadth of ship *B*** (in m), is the greatest moulded breadth measured amidships at the scantling draught.

1.2.3 **Moulded depth *D*** (in m) is the vertical distance measured at the middle of the length L from top of keel to top of the deck beam at side on the uppermost continuous deck. When a rounded gunwale is arranged, the moulded depth is to be measured to the point of intersection of the continued moulded lines of the deck and side shell plating.

1.2.4 **Draught *d*** (in m) , i.e. the scantling draught, is the vertical distance measured at the middle of the length L from top of keel to the waterline at the scantling draught. Scantling draught, at which the strength requirements for the scantlings of the ship are met and represents the full load condition. The scantling draught is to be not less than that corresponding to the assigned freeboard.

1.2.5 **Draught d_{LC}** (in m) is the vertical distance measured at the middle of the length L from top of keel to the waterline in corresponding loading condition.

1.2.6 **Block coefficient C_b** is the moulded block coefficient corresponding to the waterline at the scanting draught, to be determined by the following formula:

$$C_b = \frac{\nabla}{LBd}$$

where: ∇—moulded displacement, in m³, at scantling draught d;

L—length of ship, in m;

B—breadth of ship, in m;

d—draught, in m.

1.2.7 ***V*, the maximum service speed**, in knots, means the greatest speed which the ship is designed to maintain in service at her deepest seagoing draught at the maximum propeller RPM and corresponding engine MCR (Maximum Continuous Rating).

1.2.8 **Main stress and azimuth**

(1) Main stresses σ_1 and σ_2 are to be determined by the following formula:

$$\sigma_1 = \frac{\sigma_x + \sigma_y}{2} + \sqrt{\left(\frac{\sigma_x - \sigma_y}{2}\right)^2 + \tau_{xy}^2} \qquad \text{N/mm}^2$$

$$\sigma_2 = \frac{\sigma_x + \sigma_y}{2} - \sqrt{\left(\frac{\sigma_x - \sigma_y}{2}\right)^2 + \tau_{xy}^2} \qquad \text{N/mm}^2$$

where: σ_x, σ_y——normal stress, in N/mm²;

τ_{xy}——shearing stress, in N/mm².

(2) The included angle of main stress σ_1 and σ_2 is 90°, and the included angle of main stress σ_1 and X axis is to be determined by the following formula:

$$\theta = \arctan\left(\frac{\sigma_1 - \sigma_x}{\tau_{xy}}\right) \qquad \text{rad}$$

where: σ_x, σ_1 and τ_{xy} — see (1) above.

1.2.9 Coordinate system and stress symbols

(1) Geometrical dimensions of ship are determined according to following right hand coordinate system (see Figure 1.2.9 of this Chapter):

Origin: At the intersection among the longitudinal plane of symmetry of ship, the aft end of *L* and the baseline.

X axis: longitudinal axis, positive forward.

Y axis: transverse axis, positive towards portside.

Z axis: vertical axis, positive upwards.

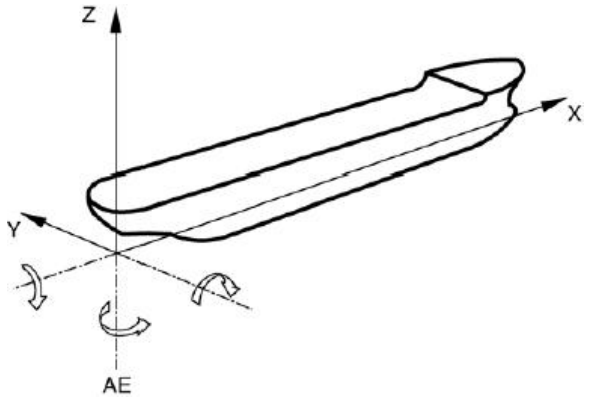

Figure 1.2.9 Reference coordinate system

(2) Definitions of positive and negative symbols of hull motion and acceleration:

Positive surge is translation in the *X*-axis direction;

Positive sway is translation in the *Y*-axis direction;

Positive heave is translation in the *Z*-axis direction;

Positive roll motion is positive rotation about *X*-axis by the right-hand rule;

Positive pitch motion is positive rotation about *Y*-axis by the right-hand rule;

Positive yaw motion is positive rotation about *Z*-axis by the right-hand rule;

Longitudinal linear acceleration of any point on the ship is positive in the *X*-axis direction;

Transverse linear acceleration of any point on the ship is positive in the *Y*-axis direction;

Vertical linear acceleration of any point on the ship is positive in the *Z*-axis direction.

(3) Definitions of stress symbols: positive for tensile stress and negative for compressive stress.

1.3 Definitions of fatigue assessment terms

1.3.1 Hot spots are locations in the structure where fatigue cracks may initiate, generally located at weld toe, weld root of partial penetration or fillet weld and free edge of plate.

1.3.2 Nominal stress σ_n (in N/mm^2) is the stress in a structural component taking into account macro-geometric effect but disregarding the stress concentration due to structural discontinuities and the presence of welds. Nominal stress may be obtained by using fine mesh FE analysis or beam theory.

1.3.3 Hot spot stress σ_h (in N/mm^2) is the stress at the hot spot taking into account the stress

concentration due to structural discontinuities and presence of welded attachments but disregarding the non-linear stress peak caused by the notch at the weld toe. The hot spot stress may be obtained by multiplying the nominal stress by a Stress Concentration Factor (SCF), or directly by a very fine mesh FE analysis.

1.3.4 Stress concentration factor K_g is the ratio of hot spot stress to nominal stress, which is to be determined by the following formula:

$$K_g = \frac{\sigma_h}{\sigma_n}$$

where: σ_h—hot spot stress, in N/mm^2;

σ_n—nominal stress, in N/mm^2.

1.3.5 Hot spot stress range S_h (in N/mm^2) is stress range resulted from alternating hot spot stress of structure fatigue, which is to be determined by the following formula:

$$S_h = \left|\sigma_{\max} - \sigma_{\min}\right| \quad \text{N/mm}^2$$

where: $\sigma_{\max}$—maximum value of hot spot stress circulation, in N/mm^2;

$\sigma_{\min}$—minimum value of hot spot stress circulation, in N/mm^2.

1.3.6 Mean hot spot stress σ_m (in N/mm^2) is mean value resulted from alternating hot spot stress of structure fatigue, which is to be determined by the following formula:

$$\sigma_m = (\sigma_{\max} + \sigma_{\min})/2 \quad \text{N/mm}^2$$

where: $\sigma_{\max}$—maximum value of hot spot stress circulation, in N/mm^2;

$\sigma_{\min}$—minimum value of hot spot stress circulation, in N/mm^2.

1.3.7 Design stress range S_D (in N/mm^2) is the stress range for fatigue assessment and obtained by correction of plate thickness, correction of mean hot spot stress for hot spot stress range and correction of material strength.

1.3.8 Critical locations are defined as the specific locations that can be prone to fatigue damage for which design improvements are provided, which are within the area by reason of stress concentration, alignment, discontinuity and corrosion will have a higher probability of failure during the life of the ship than the surrounding structures.

1.4 Fatigue damage and failure mode

1.4.1 When ships navigate at sea, the ship structures are always affected by wave forces and inertial forces resulted from ships' movements. Because both wave forces and inertial forces are continuously variable dynamic loads, they produce alternating stresses in the interior of ship structures, rending fatigue damages on ship structures.

1.4.2 Fatigue damages are one of the main damages to the ship structures. Especially for large ships and those of high tensile steel the fatigue problems are outstanding.

1.4.3 The aim of the fatigue control is to ensure that all parts of the hull structure subjected to fatigue (dynamic) loading have adequate fatigue life. Calculated fatigue lives, calibrated with the relevant fatigue damage data, may give the basis for the structural design (steel selection, scantlings and local details). Furthermore, they can form the basis for efficient inspection programs during fabrication and throughout the service life of the structure.

1.4.4 There are mainly four fatigue cracking failure modes:

(1) Fatigue crack growth from the weld toe into the base material (see Figure 1.4.4(1) of this

Chapter):

In welded structures, fatigue cracking from weld toes into the base material is a frequent failure mode. The fatigue crack is initiated at small defects or undercuts at the weld toe.

In order to prevent such failure mode, the Guidelines provides method for fatigue assessment of structural welded details.

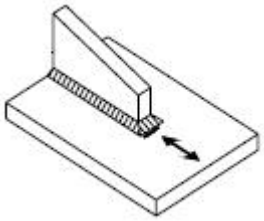

Figure 1.4.4(1)

(2) Fatigue crack growth from the weld root through the fillet weld (see Figure 1.4.4(2) of this Chapter):

Fatigue cracking from root of fillet welds with crack growth through the weld is a failure mode that can lead to significant consequences.

In order to prevent such failure mode, the Appendix of the Guidelines provides welding requirements for structural welded details at critical locations.

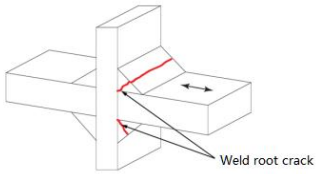

Figure 1.4.4(2)

(3) Fatigue crack growth from the weld root into the section under the weld (see Figure 1.4.4(3) of this Chapter):

Fatigue crack growth from the weld root into the section under the weld is observed during service life of structures and is also observed in laboratory fatigue testing. To avoid such failure mode, full penetration welds may be used at some critical locations where such type of cracks is liable to occur.

In order to prevent such failure mode, the Appendix of the Guidelines provides welding requirements for structural welded details at critical locations.

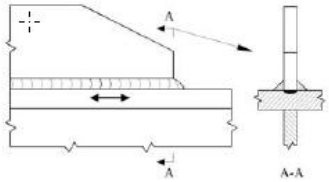

Figure 1.4.4(3)

(4) Fatigue crack growth from a free edge of non-welded details (see Figure 1.4.4(4) of this Chapter):

Fatigue cracking in the base material is a failure mode that is of concern in components with high

stress cycles. Then the fatigue cracks often initiate from notches or grooves in the components or from small surface defects/irregularities.

In order to prevent such failure mode, the Guidelines provides method for fatigue assessment of non-welded structural details.

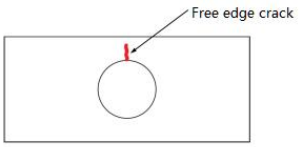

Figure 1.4.4(4)

1.5 Fatigue assessment method

1.5.1 Fatigue assessment is based upon linear cumulative damage model (Palmgren-Miner rule). Cumulative damage D is to be obtained by the following formula:

$$D = N_T \int_0^{\infty} \frac{f(S)}{N(S)} dS$$

where: N_T—stress total circulation cycles for structure in its design service life;

S—design stress ranges;

$f(S)$—probability density factor of long-term distribution of design stress range;

$N(S)$—number of cycles when failure of structure fatigue corresponding to design stress range S.

1.5.2 Fatigue assessment of ship structure may be carried out by means of simplified and spectrum analysis. Fatigue assessment methods in the Guidelines are based on simplified analysis.

1.5.3 The simplified fatigue analysis methods are mainly composed of following steps:

(1) fatigue load calculations;

(2) calculations of hot spot stress range;

(3) selection of design S-N curve;

(4) calculations and criteria for cumulative damage.

The flow of fatigue strength assessment of hull structure carried out by applying the Guidelines is shown in Figure 1.5.3 of this Chapter.

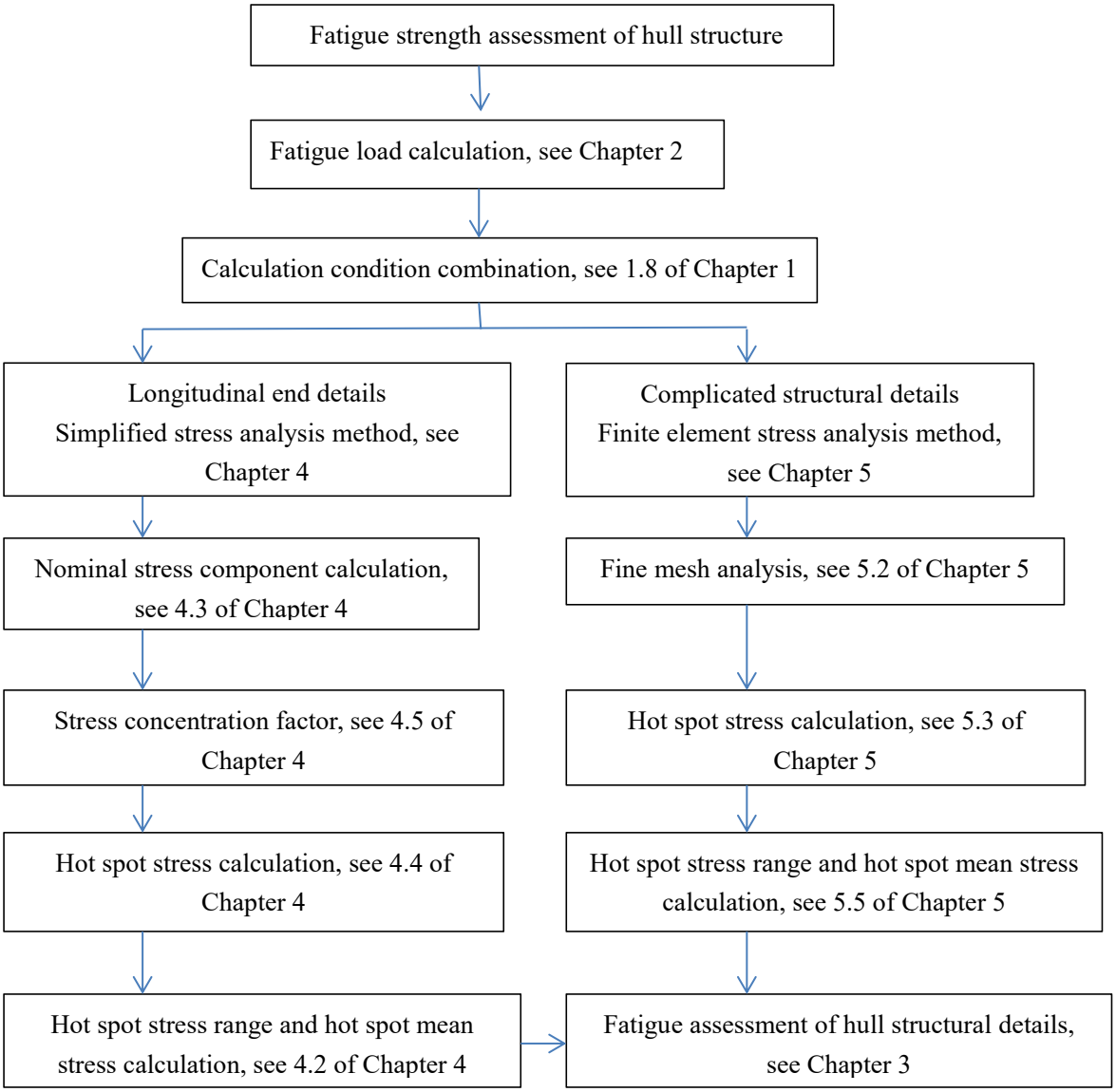

Figure 1.5.3

1.5.4 S-N curves are the basic S-N curves (see Figure 1.5.4 of this Chapter) for non-tubular joints consisting of eight curves (curves B, C, D, E, F, F_2, G and W and each shows a kind of relationship of structural details bearing alternating stress range values and the number of stress cycles), as amended by U.K. Department of Energy. Such curves are applicable to steel material of minimum yield stress less than 400 N/mm^2, and the corresponding survival probability is 97.6%.

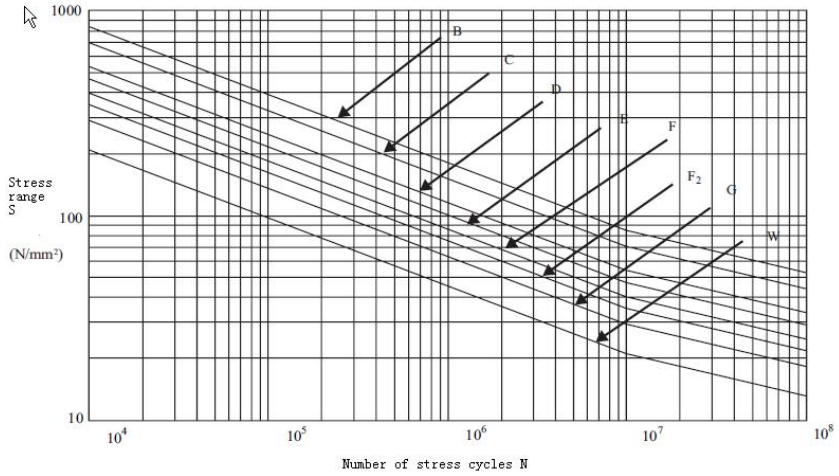

Figure 1.5.4

1.6 Corrosion correction

1.6.1 For fatigue assessment, the effect of normal corrosion wear of hull structure is to be considered. In the Guidelines, as-built scantlings are adopted for stress calculation, but hot spot stress is to be calculated by multiplying the corrosion correction factors as required below:

(1) For hull girder bending normal stress during simplified stress analysis and hot spot stress under global load case during finite element stress analysis, corrosion correction factor f_{ch} = 1.05;

(2) For bending normal stress under lateral load during simplified stress analysis and hot spot stress under local load case during finite element stress analysis, corrosion correction factor f_{cl} = 1.1.

1.7 Loading conditions for fatigue assessment

1.7.1 Wave loads on the hull vary with draught and load distribution, and therefore, more than one loading condition need to be considered for fatigue assessment. Determination of loading condition relies on ship type, and two to three common loading and ballast conditions are usually selected as loading conditions for fatigue assessment.

1.7.2 Loading conditions for fatigue assessment of oil tankers and chemical tankers are homogeneous full load condition and normal ballast condition. For details, see Table 1.7.2 of this Chapter.

Requirements for loading conditions for fatigue assessment of oil tankers and chemical tankers **Table 1.7.2**

Loading conditions for fatigue assessment	Loading mode	Draught	Still water bending moment correction coefficient C_{SW}	Time distribution factor a
Homogeneous full load		Full load draught	0.6 (sagging)	0.425
Normal ballast	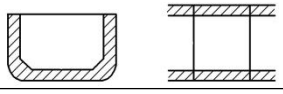	Ballast draught	0.8 (hogging)	0.425

1.7.3 Loading conditions for fatigue assessment of bulk carrier are homogeneous full load condition, alternate full load condition and normal ballast condition. For details, see Table 1.7.3 of this Chapter. Definitions of relevant parameters are as follows:

M_H is actual cargo mass in a cargo hold at draught d and under homogeneous loading condition (All cargo holds are loaded with same loading ratio, and all ballast tanks are empty tanks);

M_{HD} is maximum allowable cargo mass in a cargo hold at draught d and under alternate loading condition (All cargo holds have same cargo density and loading ratio, and all ballast tanks are empty tanks);

V_{FULL} is volume of cargo hold, including volume enclosed by hatch coaming of cargo hold.

Requirements for loading conditions for fatigue assessment of bulk carriers

Table 1.7.3

Loading conditions for fatigue assessment	Loading mode	Draught	Still water bending moment correction coefficient C_{SW}	Cargo mass of cargo hold M, in t	Density of dry bulk cargo ρ_C, in t/m³	Time distribution factor a	
						Not alternate loading	Alternate loading
Homogeneous full load	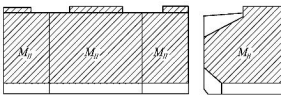	Full load draught	0.4 (sagging)	M_H	$\frac{M_H}{V_{FULL}}$	0.5	0.25
Alternate full load	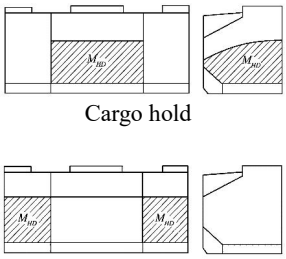 Cargo hold Empty tank	Full load draught	0.75 (hogging)	M_{HD}	Maximum cargo density allowed by design, 3.0 if not specified	--	0.25
Normal ballast	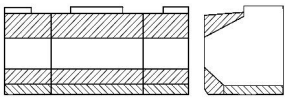	Ballast draught	0.8 (hogging)	--	--	0.35	0.35

1.7.4 Loading conditions for fatigue assessment of container ship are full load condition and normal ballast condition. For details, see Table 1.7.4 of this Chapter.

Requirements for loading conditions for fatigue assessment of container ships

Table 1.7.4

Loading conditions for fatigue assessment	Loading mode	Draught	Still water bending moment correction coefficient C_{SW}	Time distribution factor a
Full load	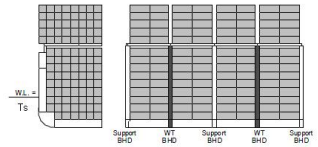	Full load draught	0.9 (hogging)	0.65
Normal ballast	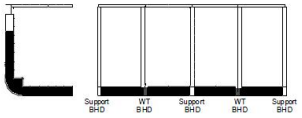	Ballast draught	0.8 (hogging)	0.2

1.7.5 Loading conditions for fatigue assessment of membrane tank liquefied gas carriers and independent tank liquefied gas carriers are homogeneous full load condition and normal ballast condition. For details, see Tables 1.7.5(1) to (4) of this Chapter.

Requirements for loading conditions for fatigue assessment of membrane tank liquefied gas carriers **Table 1.7.5(1)**

Loading conditions for fatigue assessment	Loading mode	Draught	Still water bending moment correction coefficient C_{SW}	Time distribution factor *a*
Homogeneous full load	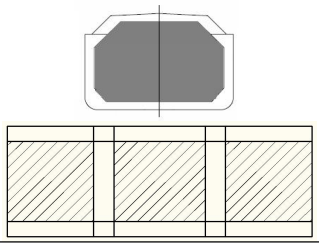	Full load draught	0.7 (sagging)	0.45
Normal ballast	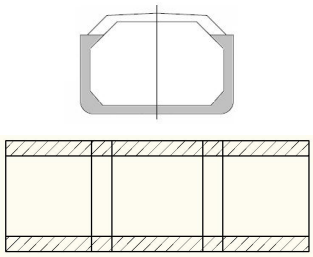	Ballast draught	0.8 (hogging)	0.4

Requirements for loading conditions for fatigue assessment of type A/B independent tank liquefied gas carriers **Table 1.7.5(2)**

Loading conditions for fatigue assessment	Loading mode	Draught	Still water bending moment correction coefficient C_{SW}	Time distribution factor *a*
Homogeneous full load	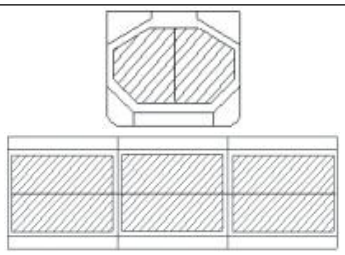	Full load draught	0.4 (hogging)	0.45
Normal ballast	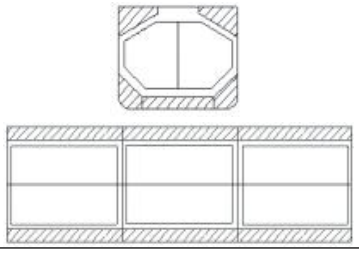	Ballast draught	0.9 (hogging)	0.4

Requirements for loading conditions for fatigue assessment of type C independent tank liquefied gas carriers **Table 1.7.5(3)**

Loading conditions for fatigue assessment	Loading mode	Draught	Still water bending moment correction coefficient C_{SW}	Time distribution factor *a*
Homogeneous full load		Full load draught	0.6 (hogging)	0.45
Normal ballast	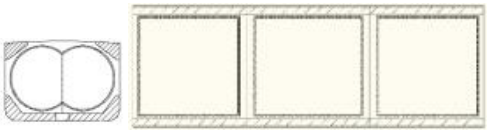	Ballast draught	0.8 (hogging)	0.4

1.7.6 Loading conditions for fatigue assessment of ore carriers are homogeneous full load condition, normal ballast condition and maximum ballast condition (if any). For details, see Table 1.7.6 of this Chapter.

Requirements for loading conditions for fatigue assessment of ore carriers

Table 1.7.6

Loading conditions for fatigue assessment	Loading mode	Draught	Still water bending moment correction coefficient C_{SW}	Cargo mass of cargo hold *M*, in t	Density of dry bulk cargo ρ_C, in t/m³	Time distribution factor *a*
Homogeneous full load	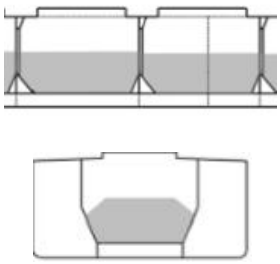	Full load draught	0.8 (sagging)	M_H	Maximum cargo density allowed by design	0.5
Normal ballast	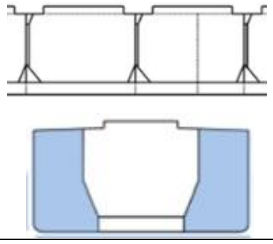	Light ballast draught	0.6 (hogging)	--	--	0.35, if there is no specific data, with normal ballast and maximum ballast accounting for 0.175 respectively
Maximum ballast (if any)		Maximum draught of ballast conditio	0.65 (sagging)	--	--	

Loading conditions for fatigue assessment	Loading mode	Draught	Still water bending moment correction coefficient C_{SW}	Cargo mass of cargo hold M, in t	Density of dry bulk cargo ρ_C, in t/m^3	Time distribution factor a
	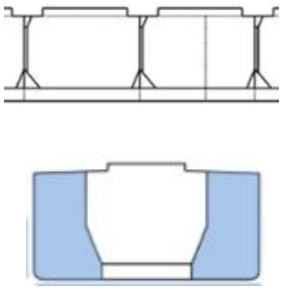	n				

1.7.7 Loading conditions for fatigue assessment of vehicle carriers are homogeneous full load condition and normal ballast condition. For details, see Table 1.7.7 of this Chapter.

Requirements for loading conditions for fatigue assessment of vehicle carriers

Table 1.7.7

Loading conditions for fatigue assessment	Loading mode	Draught	Still water bending moment correction coefficient C_{SW}	Time distribution factor a
Homogeneous full load		Full load draught	0.85 (hogging)	0.65
Normal ballast	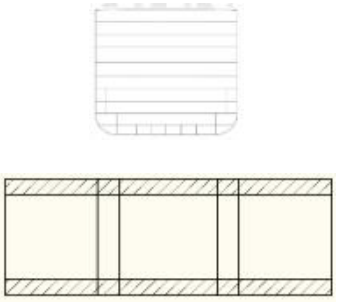	Ballast draught	0.85 (hogging)	0.2

1.8 Calculation conditions

1.8.1 Calculation conditions are the combination of loading conditions for fatigue assessment and corresponding load cases.

1.8.2 For each loading condition for fatigue assessment, all fatigue load cases for fatigue assessment which lead to dynamic load combination are to be taken into account.

1.8.3 The predominant load case for each loading condition for fatigue assessment is defined as load case where the design stress range for the hot spot is the maximum among all load cases.

CHAPTER 2 FATIGUE LOAD

2.1 General requirements

2.1.1 This Chapter specifies loads applicable to fatigue assessment of hull structure.

2.1.2 Loads given in this Chapter include hull girder loads in still water and wave as well as lateral loads of plate.

2.1.3 Hull girder loads in still water include vertical still water bending moment, and hull girder loads in wave include vertical wave bending moment and horizontal wave bending moment.

2.1.4 Lateral loads in still water include external hydrostatic pressure and internal hydrostatic pressure induced by cargo and ballast water. Lateral loads in wave include external hydrodynamic pressure and internal inertia pressure induced by cargo and ballast water.

2.1.5 Design loads are determined by means of equivalent design wave concept, and a set of load combination factors is given for each equivalent design wave. Lateral loads in wave and hull girder loads in wave need to be combined according to load combination factors.

2.1.6 The probability level of exceedance of fatigue load is 10^{-2}.

2.2 Parameter definitions

2.2.1 Service coefficient f_r in this Chapter is defined as follows:

f_r =1.00 for unrestricted service/open sea service;

f_r =0.90 for service category 1/greater coastal service;

f_r =0.85 for service category 2/coastal service;

f_r =0.80 for service category 3/sheltered service.

2.2.2 Probability level coefficient f_p in this Chapter is defined as follows:

$$f_P = 0.25^{\frac{1}{\xi_1}}$$

where: ξ_1 —parameter to be selected according to different load type and Table 2.2.2 of this Chapter.

Parameter ξ_1 **Table 2.2.2**

Ship motion and acceleration	$\xi_1 = 1.50 - 0.036\sqrt{L}$
Hull girder loads in wave	$\xi_1 = 1.45 - 0.036\sqrt{L}$
External hydrodynamic pressure	$\xi_1 = 1.45 - 0.036 f\sqrt{L}$

where: L—length of ship, in m;

f—factor to be calculated in accordance with the following formulae respectively:

$$f = 1 - \frac{0.08z}{d_{LCi}} \quad \text{for } z \le d_{LCi};$$

$$f = 0.92 + \frac{0.08(z - d_{LCi})}{D - d_{LCi}} \quad \text{for } z > d_{LCi}$$

where: z—Z coordinate of calculated point, in m;

d_{LCi}—draught at hull transverse section considered in corresponding loading condition, to be taken as draught at midpoint of model length in corresponding loading condition during finite element stress analysis, in m;

D—moulded depth, to be taken as the height of freeboard deck for vehicle carriers, in m.

2.2.3 Wave coefficient C is to be calculated in accordance with the following formulae respectively:

$$C = 10.75 - \left[\frac{(300 - L)}{100}\right]^{1.5} \quad \text{for} \quad 90 \text{ m} \le L \le 300 \text{ m}$$

$$C = 10.75 \quad \text{for } 300 \text{ m} < L < 350 \text{ m}$$

$$C = 10.75 - \left[\frac{(L - 350)}{150}\right]^{1.5} \quad \text{for } 350 \text{ m} \le L \le 500 \text{ m}$$

where: L—length of ship, in m.

2.3 Ship motions and accelerations

2.3.1 Ship's single degree of freedom motion is to be calculated in accordance with the following requirements:

(1) For oil tanker, chemical tanker, bulk carrier, membrane tank liquefied gas carrier, independent tank liquefied gas carrier and ore carrier, roll encounter period T_E is to be calculated in accordance with the following formula:

$$T_E = \frac{2.3k_r}{\sqrt{GM}} \quad \text{s}$$

where: k_r—roll radius of gyration in the loading condition considered, in m, which may be assumed according to Table 2.3.1(1) of this Chapter if no specific values available;

GM—initial metacentric height in the loading condition considered, which may be assumed according to Table 2.3.1(1) of this Chapter if no specific values available.

k_r and GM for oil tanker, chemical tanker, bulk carrier, membrane tank liquefied gas carrier, independent tank liquefied gas carrier and ore carrier

Table 2.3.1(1)

Loading conditions for fatigue assessment	k_r	GM
Full load condition (alternate or homogeneous loading)	0.35B	0.12B
Normal ballast condition	0.45B	0.33B
Maximum ballast condition (only for ore carrier)	0.40B	0.25B

(2) For container ship and vehicle carrier, roll encounter period T_E is to be calculated in accordance with the following formula:

$$T_E = 0.5\left(T_R + \sqrt{T_R^2 - \frac{2\pi}{g}VT_R}\right) \quad \text{for} \quad T_R > \frac{2\pi}{g}V$$

$$T_E = T_R \quad \text{for} \quad T_R \le \frac{2\pi}{g}V$$

where: T_R—roll period, in s, to be calculated according to the following formula:

$$T_R = \frac{2.2k_r}{\sqrt{GM}}$$

where: k_r—roll radius of gyration in the loading condition considered, in m, which may be assumed according to Table 2.3.1(2) of this Chapter if no specific values available;

GM—initial metacentric height in the loading condition considered, which may be assumed according to Table 2.3.1(2) of this Chapter if no specific values available;

V—maximum service speed, in Kn.

k_r and *GM* for container ship and vehicle carrier

Table 2.3.1(2)

Loading conditions for fatigue assessment	k_r	***GM***
Full load condition	0.35*B*	0.07*B*
Normal ballast condition	0.45*B*	0.20*B*

(3) The maximum roll angle θ is to be calculated as follows, but need not be greater than 0.523 f_p rad:

$$\theta = \frac{(62.5 - 1.25T_E) f_r f_P k_b}{B + 75} \quad \text{rad}$$

where: f_r — service coefficient, see 2.2.1 of this Chapter;

f_P —probability level coefficient, see 2.2.2 of this Chapter;

k_b — coefficient, to be taken as follows:

k_b =1.2 for ships without bilge keel;

k_b =1.0 for ships with bilge keel;

k_b = 0.8 for ships with activated stabilizers;

B — breadth of ship, in m.

(4) Pitch period T_P and maximum pitch angle Φ are to be calculated as follows, and maximum pitch angle Φ need not be greater than 0.14 f_P rad:

$$T_P = 1.80\sqrt{L/10} \quad \text{s}$$

$$\Phi = 0.25 a_0 / C_b \quad \text{rad}$$

where: *L* — length of ship, in m;

C_b — block coefficient;

a_0 — acceleration factor, to be calculated as follows:

$$a_0 = f_r f_P (3\frac{C}{L} + C_V \frac{V}{\sqrt{L}})$$

where: f_r — service coefficient, see 2.2.1 of this Chapter;

f_p — probability level coefficient, see 2.2.2 of this Chapter;

$C_V = \sqrt{L}/50$, not to be greater than 0.2;

L — length of ship, in m;

V — maximum service speed, in kn;

C — wave coefficient, see 2.2.3 of this Chapter.

2.3.2 Ship motion accelerations are to be calculated according to the following requirements:

(1) Roll acceleration a_{roll} is to be calculated as follows:

$$a_{roll} = \theta(\frac{2\pi}{T_E})^2 \qquad \text{rad/s}^2$$

where: θ —maximum roll angle, in rad, see 2.3.1(3) of this Chapter;

T_E —roll encounter period, in s, see 2.3.1(1) or 2.3.1(2) of this Chapter.

(2) Pitch acceleration is to be calculated as follows:

$$a_{pitch} = \Phi(\frac{2\pi}{T_P})^2 \qquad \text{rad/s}^2$$

where: Φ —maximum pitch angle, in rad, see 2.3.1(4) of this Chapter;

T_P —pitch period, in s, see 2.3.1(4) of this Chapter.

(3) Vertical acceleration a_{heave} due to heave is to be calculated as follows:

$$a_{heave} = 7a_0 / \sqrt{C_b} \qquad \text{m/s}^2$$

where: a_0 —acceleration coefficient, to be calculated according to 2.3.1(4) of this Chapter;

C_b — block coefficient.

(4) Transverse acceleration a_{sway} due to sway is to be calculated as follows:

$$a_{sway} = 3a_0 \qquad \text{m/s}^2$$

where: a_0 —acceleration coefficient, to be calculated according to 2.3.1(4) of this Chapter.

(5) Longitudinal acceleration a_{surge} due to surge is to be calculated as follows:

$$a_{surge} = 2a_0\sqrt{C_b} \qquad \text{m/s}^2$$

where: a_0 —acceleration coefficient, to be calculated according to 2.3.1(4) of this Chapter;

C_b — block coefficient.

2.3.3 Reference values of longitudinal, transverse and vertical accelerations of any point on the ship are to be calculated as follows:

(1) Longitudinal:

$$a_X = -C_{XG}g\sin\Phi + C_{XS}a_{surge} + C_{XP}a_{pitch-x} \qquad \text{m/s}^2$$

(2) Transverse:

$$a_Y = C_{YG}g\sin\theta + C_{YS}a_{sway} - C_{YR}a_{roll-y} \qquad \text{m/s}^2$$

(3) Vertical:

$$a_Z = C_{ZH}a_{heave} + C_{ZR}a_{roll-z} - C_{ZP}a_{pitch-z} \qquad \text{m/s}^2$$

where: $C_{XG}, C_{XS}, C_{XP}, C_{YG}, C_{YS}, C_{YR}, C_{ZH}, C_{ZR}, C_{ZP}$ —load combination factors defined by 2.5.3 of this Chapter;

a_{heave}, a_{sway} and a_{surge} —see 2.3.2 of this Chapter;

Φ —maximum pitch angle, in rad, see 2.3.1(4) of this Chapter;

θ —maximum roll angle, in rad, see 2.3.1(3) of this Chapter;

$a_{pitch-x}$ —longitudinal acceleration due to pitch, in m/s^2, to be calculated as follows:

$$a_{pitch-x} = a_{pitch} R \qquad \text{m/s}^2$$

a_{roll-y} —transverse acceleration due to roll, in m/s^2, to be calculated as follows:

$$a_{roll-y} = a_{roll} R \qquad \text{m/s}^2$$

a_{roll-z} —vertical acceleration due to roll, in m/s^2, to be calculated as follows:

$$a_{roll-z} = a_{roll} y \qquad \text{m/s}^2$$

$a_{pitch-z}$ —vertical acceleration due to pitch, in m/s^2, to be calculated as follows:

$$a_{pitch-z} = a_{pitch}(x - 0.45L) \qquad \text{m/s}^2$$

where: a_{roll}, a_{pitch} —see 2.3.2 of this Chapter;

$R = z - \min(\frac{D}{4} + \frac{d_{LC}}{2}, \frac{D}{2})$;

d_{LC} —draught amidships in corresponding loading condition, in m;

D—moulded depth, in m;

L — length of ship, in m;

x, y, z —longitudinal, transverse and vertical coordinate of calculated point, in m.

2.4 Hull girder loads

2.4.1 Wave vertical bending moment and wave horizontal bending moment in this paragraph are absolute values. The symbols of wave bending moment are to be considered after combination of load combination factors in Table 2.5.3 of this Chapter. The symbol conventions for still water vertical bending moment, wave vertical bending moment and horizontal bending moment at any transverse section of the ship are shown in Figure 2.4.1 of this Chapter.

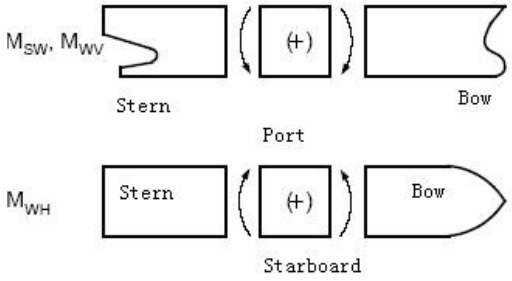

Figure 2.4.1 Symbol conventions for bending moment M_{SW}, M_{WV} and M_{WH}

2.4.2 Hull girder still water bending moment M_{SW} for fatigue analysis is to be calculated in accordance with the following formula:

$$M_{SW} = C_{SW}\overline{M}_S \qquad \text{kN·m}$$

where: C_{SW} —correction coefficient of still water bending moment in corresponding loading condition, see 1.7 of Chapter 1;

$\overline{M}_S$ —allowable bending moment for hull girder hogging or sagging, in kN·m.

2.4.3 Vertical wave bending moment at any transverse section of the hull is to be calculated in accordance with the following formula:

(1) Hogging:

$$M_{WV,H} = 190F_M f_r f_P CL^2 BC_b 10^{-3} \qquad \text{kN·m}$$

(2) Sagging:

$$M_{WV,S} = 110F_M f_r f_P f_e CL^2 B(C_b + 0.7)10^{-3} \qquad \text{kN·m}$$

where: F_M —distribution factor defined in Table 2.4.3 of this Chapter;

f_r —service coefficient, see 2.2.1 of this Chapter;

f_P —probability level coefficient, see 2.2.2 of this Chapter;

f_e —coefficient, to be determined as follows:

$f_e = f_{es}$, when considering the influence of linear springing;

$f_e = f_{ews}$, when considering the influence of non-linear whipping and springing;

where: f_{es} —influence factor of linear springing, see 3.3 of CCS Guidelines for direct calculation assessment of hull structure including springing and whipping;

f_{ews} —influence factor of non-linear whipping and springing, see 4.4 of CCS Guidelines for direct calculation assessment of hull structure including springing and whipping;

C—wave coefficient, see 2.2.3 of this Chapter;

L—length of ship, in m;

B—breadth of ship, in m;

C_b—block coefficient.

Distribution factor F_M **Table 2.4.3**

Hull section position	Distribution factor F_M
$0 \le x < 0.4L$	$2.5\frac{x}{L}$
$0.4L \le x \le 0.65L$	1.0
$0.65L < x \le L$	$2.86(1-\frac{x}{L})$

2.4.4 Horizontal wave bending moment at any transverse section of the hull is to be calculated in accordance with the following formula:

$$M_{WH} = (0.3 + \frac{L}{2000})F_M f_r f_P C L^2 d_{LC} C_b \quad \text{kN·m}$$

where: F_M—distribution factor, see 2.4.3 of this Chapter;

f_r—service coefficient, see 2.2.1 of this Chapter;

f_P—probability level coefficient, see 2.2.2 of this Chapter;

C—wave coefficient, see 2.2.3 of this Chapter;

L—length of ship, in m;

B—breadth of ship, in m;

d_{LC}—draught amidships in corresponding loading condition, in m;

C_b—block coefficient.

2.5 Load cases

2.5.1 Load cases are composed of the following regular waves:

(1) regular waves when the vertical wave bending moment becomes maximum in head sea (“H”);

(2) regular waves when the vertical wave bending moment becomes maximum in following sea (“F”);

(3) regular waves when the roll motion becomes maximum (“R”);

(4) regular waves when the hydrodynamic pressure at the waterline becomes maximum (“P”).

2.5.2 The load cases corresponding to the equivalent design waves are defined in Table 2.5.2 of this Chapter.

Definitions of load cases **Table 2.5.2**

Load cases	H1	H2	F1	F2	R1P	R2P
EDW	"H"		"F"		"R"	
Heading	Head		Follow		Beam	
Weather side	-		-		Port	
Effect	Maximum bending moment		Maximum bending moment		Maximum roll	
	Sagging	Hogging	Sagging	Hogging	(+)	(-)
Motion definition	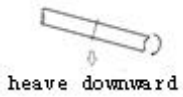		-	-	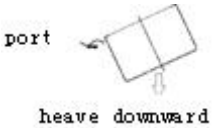	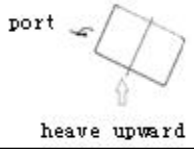

Table 2.5.2(Continued)

Load cases	R1S	R2S	P1P	P2P	P1S	P2S
EDW	"R"		"P"		"P"	
Heading	Beam		Beam		Beam	
Weather side	Starboard		Port		Starboard	
Effect	Maximum roll		Maximum external pressure		Maximum external pressure	
	(-)	(+)	(+)	(-)	(-)	(+)
Motion definition	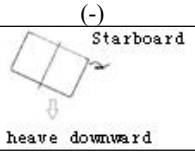	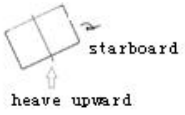	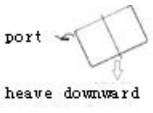	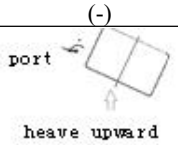	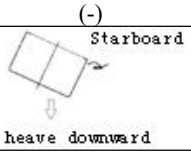	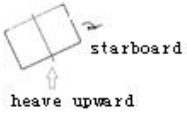

2.5.3 The hull girder loads and the acceleration components to be considered in each load case are to be obtained by multiplying the reference value of each component by the relevant load combination factor LCF defined in Table 2.5.3 of this Chapter.

Load combination factor LCF **Table 2.5.3**

	LCF	H1	H2	F1	F2	R1P	R2P
M_{WV}	C_{WV}	-1	1	$-0.75-0.2\frac{d_{LC}}{d}$	$0.75+0.2\frac{d_{LC}}{d}$	$0.1-0.2\frac{d_{LC}}{d}$	$0.2\frac{d_{LC}}{d}-0.1$
M_{WH}	C_{WH}	0	0	0	0	$1.1-\frac{d_{LC}}{d}$	$\frac{d_{LC}}{d}-1.1$
a_{surge}	C_{XS}	$0.3-0.2\frac{d_{LC}}{d}$	$0.2\frac{d_{LC}}{d}-0.3$	$-0.4\frac{d_{LC}}{d}+0.2$	$0.4\frac{d_{LC}}{d}-0.2$	0	0
a_{pitch_x}	C_{XP}	-0.9	0.9	0.1	-0.1	0	0
$gsin\Phi$	C_{XG}	$0.4\frac{d_{LC}}{d}+0.4$	$-0.4\frac{d_{LC}}{d}-0.4$	-0.15	0.15	0	0
a_{sway}	C_{YS}	0	0	0	0	$0.2-0.2\frac{d_{LC}}{d}$	$0.2\frac{d_{LC}}{d}-0.2$
a_{roll_y}	C_{YR}	0	0	0	0	1	-1
$gsin\theta$	C_{YG}	0	0	0	0	-1	1
a_{heave}	C_{ZH}	$0.8\frac{d_{LC}}{d}-0.1$ 5	$0.15-0.8\frac{d_{LC}}{d}$	0	0	c_{ZHR}	$-c_{ZHR}$
a_{roll_z}	C_{ZR}	0	0	0	0	1	-1
a_{pitch_z}	C_{ZP}	-0.9	0.9	0.1	-0.1	0	0

Table 2.5.3 (Continued)

	LCF	R1S	R2S	P1P	P2P	P1S	P2S
M_{WV}	C_{WV}	$0.1\text{-}0.2\frac{d_{LC}}{d}$	$0.2\frac{d_{LC}}{d}\text{-}0.1$	$0.3\text{-}0.8\frac{d_{LC}}{d}$	$0.8\frac{d_{LC}}{d}\text{-}0.3$	$0.3\text{-}0.8\frac{d_{LC}}{d}$	$0.8\frac{d_{LC}}{d}\text{-}0.3$
M_{WH}	C_{WH}	$\frac{d_{LC}}{d}\text{-}1.1$	$1.1\text{-}\frac{d_{LC}}{d}$	$0.6\text{-}0.6\frac{d_{LC}}{d}$	$0.6\frac{d_{LC}}{d}\text{-}0.6$	$0.6\frac{d_{LC}}{d}\text{-}0.6$	$0.6\text{-}0.6\frac{d_{LC}}{d}$
a_{surge}	C_{XS}	0	0	0	0	0	0
a_{pitch_x}	C_{XP}	0	0	0	0	0	0
$gsin\Phi$	C_{XG}	0	0	0	0	0	0
a_{sway}	C_{YS}	$0.2\frac{d_{LC}}{d}\text{-}0.2$	$0.2\text{-}0.2\frac{d_{LC}}{d}$	-0.95	0.95	0.95	-0.95
a_{roll_y}	C_{YR}	-1	1	0.3	-0.3	-0.3	0.3
$gsin\theta$	C_{YG}	1	-1	-0.2	0.2	0.2	-0.2
a_{heave}	C_{ZH}	c_{ZHR}	$-c_{ZHR}$	1	-1	1	-1
a_{roll_z}	C_{ZR}	-1	1	0.3	-0.3	-0.3	0.3
a_{pitch_z}	C_{ZP}	0	0	0	0	0	0

where: c_{ZHR} ——coefficient determined by ship type, to be calculated in accordance with the following formulae respectively:

$c_{ZHR} = 0.7 - 0.4\frac{d_{LC}}{d}$, for oil tanker, chemical tanker, membrane tank liquefied gas carrier, independent tank liquefied gas carrier, bulk carrier and ore carrier

$c_{ZHR} = 0.7 - 0.6\frac{d_{LC}}{d}$, for container ship and vehicle carrier

where: L——length of ship, in m;

d_{LC} ——draught amidships in corresponding loading condition, in m;

d ——draught, in m.

2.5.4 The hull girder loads are the sum of vertical hull girder still water load and corresponding hull girder wave load multiplied by load combination factor respectively.

2.5.5 The internal loads are the sum of static pressures or forces induced by the weights carried, including those carried on decks, and of inertial pressures or forces induced by the accelerations on these weights and calculated with load combination factors.

2.6 External pressure

2.6.1 Total sea water pressure p_{SW} at any point of the shell plating of hull is to be obtained by following formula and not to be negative:

$$p_{SW} = p_S + p_W \qquad \text{kN/m}^2$$

where: p_S —hydrostatic pressure, in kN/m^2 , see 2.6.2 of this Chapter;

p_W —hydrodynamic pressure determined according to load case, in kN/m^2, which is wave pressure equal to hydrodynamic pressure defined in 2.6.3, 2.6.4 or 2.6.5 of this Chapter, and corrected according to 2.6.6 of this Chapter.

2.6.2 For hydrostatic pressure P_S at any point of the shell plating, see Table 2.6.2 of this Chapter.

Hydrostatic pressure p_S **Table 2.6.2**

Location	Hydrostatic pressure p_S, in kN/m^2
Points at and below the waterline（$z \le d_{LCi}$）	$\rho g(d_{LCi} - z)$
Points above the waterline（$z > d_{LCi}$）	0

where: d_{LCi} —draught at hull transverse section considered in corresponding loading condition, to be taken as draught at midpoint of model length in corresponding loading condition for finite element stress analysis, in m;

z—vertical coordinate of load point, in m.

2.6.3 The hydrodynamic pressures P_H and P_F, for load cases H1, H2, F1 and F2, at any point of the shell plating below the waterline are obtained from Table 2.6.3(1) of this Chapter, and the distribution of pressure P_{F2} is schematically given in Figure 2.6.3 of this Chapter.

Hydrodynamic pressures for load cases H1, H2, F1 and F2 **Table 2.6.3(1)**

Load case	Hydrodynamic pressure, in kN/m^2
H1	$p_{H1} = -k_{aH}k_{pH}p_{HF}$
H2	$p_{H2} = k_{aH}k_{pH}p_{HF}$
F1	$p_{F1} = -k_{aF}k_{pF}p_{HF}$
F2	$p_{F2} = k_{aF}k_{pF}p_{HF}$

Note: P_{HF} in the Table is to be calculated according to the following formula:

$p_{HF} = f_h f_r f_P C\sqrt{\frac{L + \lambda - 125}{L}}(\frac{z}{d_{LCi}} + \frac{|2y|}{B_i} + 1)$; with $\frac{2y}{B_i} \le 1.0$ and z is to be taken not greater than d_{LCi}

where: f_h—factor to be calculated according to the following formula:

f_h =1.5 for load cases H1 and H2;

f_h =2.6 for load cases F1 and F2;

k_{aH} —amplitude coefficient in the longitudinal direction of the ship for load cases H1 and H2, to be calculated according to the following formulae:

$$k_{aH} = 1 + \frac{12}{C_b}(1 - \sqrt{\frac{|2y|}{B_i}})\left|\frac{x}{L} - 0.5\right|^3 \quad \text{for } 0.0 \le x/L \le 0.5;$$

$$k_{aH} = 1 + \frac{6}{C_b}(3 - \frac{|4y|}{B_i})\left|\frac{x}{L} - 0.5\right|^3 \quad \text{for } 0.5 \le x/L \le 1.0;$$

k_{aF} —amplitude coefficient in the longitudinal direction of the ship for load cases F1 and F2, to be calculated according to the following formulae:

$$k_{aF} = 1 + (3.5 - 2\frac{d_{LC}}{d})(1 - \frac{|2y|}{B_i})(1 - 5\frac{x}{L}), \text{ for } 0 \le x/L < 0.2;$$

$k_{aF} = 1.0$, for $0.2 \le x/L < 0.9$;

$k_{aF} = 1 + 15(1 - \frac{|2y|}{B_i})(\frac{x}{L} - 0.9)$, for $0.9 \le x/L \le 1.0$;

k_{pH} —phase coefficient in the longitudinal direction of the ship for load cases H1 and H2, to be taken according to Table 2.6.3(2), and the intermediate values are to be obtained by direct interpolation:

k_{pH} value Table 2.6.3(2)

x / L	k_{pH}
0	$(1.0-\frac{d_{LC}}{d})+(0.5-\frac{d_{LC}}{d})\frac{\|2y\|}{B_i}$
$0.3-0.1\frac{d_{LC}}{d}$	-1.0
$0.5-0.2\frac{d_{LC}}{d}$	1.0
$0.9-0.4\frac{d_{LC}}{d}$	1.0
$0.9-0.2\frac{d_{LC}}{d}$	-1.0
1.0	-1.0

k_{pF} —phase coefficient in the longitudinal direction of the ship for load cases F1 and F2, to be taken according to Table 2.6.3(3), and the intermediate values are to be obtained by direct interpolation:

k_{pF} value Table 2.6.3(3)

x / L	k_{pF}
0	$-0.75-0.25\frac{\|2y\|}{B_i}$
$0.35-0.1\frac{d_{LC}}{d}$	-1.0
$0.5-0.2\frac{d_{LC}}{d}$	1.0
0.75	1.0
$0.9-0.1\frac{d_{LC}}{d}$	-1.0
1.0	$-0.5-0.5\frac{\|2y\|}{B_i}$

λ —wave length, in m, to be calculated according to following formulae:

$$\lambda = C_{L1}(1+\frac{d_{LC}}{d})L \quad \text{for load cases H1and H2;}$$

$$\lambda = C_{L1}(1+\frac{2}{3}\frac{d_{LC}}{d})L \quad \text{for load cases F1 and F2;}$$

where: L—length of ship, in m;

f_r—service coefficient, see 2.2.1 of this Chapter;

f_p—probability level coefficient, see 2.2.2 of this Chapter, z is to be taken not greater than d_{LCi} for calculation;

C—wave coefficient, see 2.2.3 of this Chapter;

d_{LCi}—draught at hull transverse section considered in corresponding loading condition, to be taken as draught at midpoint of model length in corresponding loading condition for finite element stress analysis, in m;

B_i—breadth of ship of transverse section considered at waterline, to be taken as breadth of ship at midpoint of model length in corresponding loading condition for finite element stress analysis, in m;

x, y, z—longitudinal, transverse and vertical coordinate of load point respectively, in m;

C_{L1}—coefficient to be calculated according to the following formulae respectively:

C_{L1}=0.6 for oil tanker, chemical tanker, membrane tank liquefied gas carrier, independent tank liquefied gas carrier, bulk carrier and ore carrier;

C_{L1}=0.5 for container ship and vehicle carrier;

d_{LC}—draught amidships in corresponding loading condition, in m;

d—draught, in m.

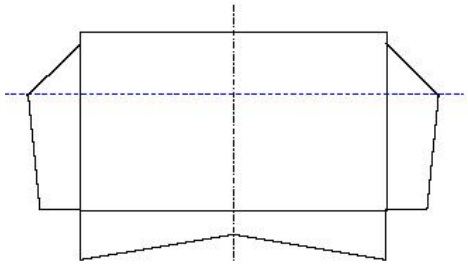

Figure 2.6.3 Distribution of hydrodynamic pressure P_{F2} amidships

2.6.4 Hydrodynamic pressure P_R, for load cases R1P, R2P, R1S and R2S, at any point of the shell plating below the waterline is to be calculated according to Table 2.6.4 of this Chapter, and pressure distribution is schematically given in Figure 2.6.4 of this Chapter.

Hydrodynamic pressure for load cases R1P, R2P, R1S and R2S Table 2.6.4

Load case	Hydrodynamic pressure, in kN/m^2
R1P	$p_{R1P} = p_{RP}$
R2P	$p_{R2P} = -p_{RP}$
R1S	$p_{R1S} = p_{RS}$
R2S	$p_{R2S} = -p_{RS}$

where: $p_{RP} = 10y\sin\theta + 0.88 f_r f_P C\sqrt{\frac{L+\lambda-125}{L}}(\frac{|2y|}{B}+1)$

$$p_{RS} = -10y\sin\theta + 0.88 f_r f_P C\sqrt{\frac{L+\lambda-125}{L}}(\frac{|2y|}{B}+1)$$

where: θ —maximum roll angle, in deg, see 2.3.1(3) of this Chapter;

f_r—service coefficient, see 2.2.1 of this Chapter;

f_p—probability level coefficient, see 2.2.2 of this Chapter;

C — wave coefficient, see 2.2.3 of this Chapter;

λ —wave length, in m, to be calculated according to following formula:

$$\lambda = \frac{g}{2\pi}T_E^2$$

y—transverse coordinate of load point, in m, port is taken as positive value;

B—breadth of ship, in m.

where: T_E—roll encounter period, in s, see 2.3.1 of this Chapter.

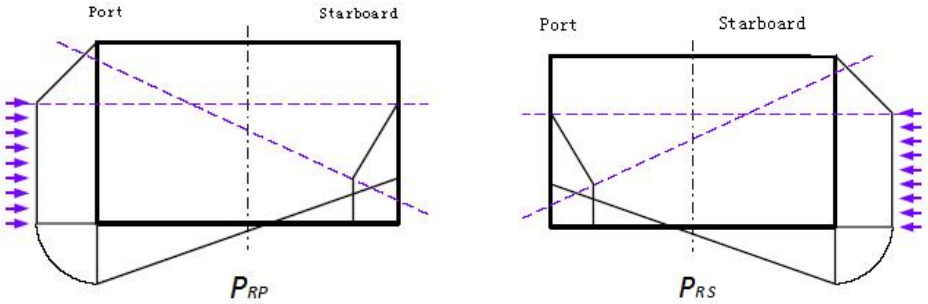

Figure 2.6.4 Distribution of P_{RP} and P_{RS} amidships

2.6.5 Hydrodynamic pressure P_P , for load cases P1P, P2P, P1S and P2S, at any point of the shell plating below the waterline is given in Table 2.6.5 of this Chapter. Distribution of pressure P_{PI} is schematically given in Figure 2.6.5 of this Chapter.

Hydrodynamic pressure for load cases P1P, P2P, P1S and P2S **Table 2.6.5**

Load case	Hydrodynamic pressure, in kN/m^2
P1P	$p_{P1P} = p_{PP}$
P2P	$p_{P2P} = -p_{PP}$
P1S	$p_{P1S} = p_{PS}$
P2S	$p_{P2S} = -p_{PS}$

where: $p_{PP} = 4.5 f_r f_p C\sqrt{\frac{L+\lambda-125}{L}}(2\frac{|z|}{d_{LCi}}+3\frac{|2y|}{B})$ for $y \geq 0$

$$= 1.5 f_r f_p C\sqrt{\frac{L+\lambda-125}{L}}(2\frac{|z|}{d_{LCi}}+3\frac{|2y|}{B}) \quad \text{for} \quad y < 0$$

$$p_{PS} = 1.5 f_r f_p C \sqrt{\frac{L+\lambda-125}{L}} (2\frac{|z|}{d_{LCi}} + 3\frac{|2y|}{B}) \quad \text{for} \quad y \geq 0$$

$$= 4.5 f_r f_p C \sqrt{\frac{L+\lambda-125}{L}} (2\frac{|z|}{d_{LCi}} + 3\frac{|2y|}{B}) \quad \text{for} \quad y < 0$$

where: λ —wave length, in m, to be calculated according to the following formula:

$$\lambda = (0.2 + C_{L2}\frac{d_{LC}}{d})L \qquad \text{m}$$

y—transverse coordinate of load point, in m;

f_r—service coefficient, see 2.2.1 of this Chapter;

f_p—probability level coefficient, see 2.2.2 of this Chapter;

C — wave coefficient, see 2.2.3 of this Chapter;

C_{L2} —coefficient to be calculated according to the following formulae:

C_{L2}=0.4 for oil tanker, chemical tanker, membrane tank liquefied gas carrier, independent tank liquefied gas carrier, bulk carrier and ore carrier;

C_{L2}=0.15 for container ship and vehicle carrier;

d_{LC} —draught amidships in corresponding loading condition, in m;

d —draught, in m;

L —length of ship, in m.

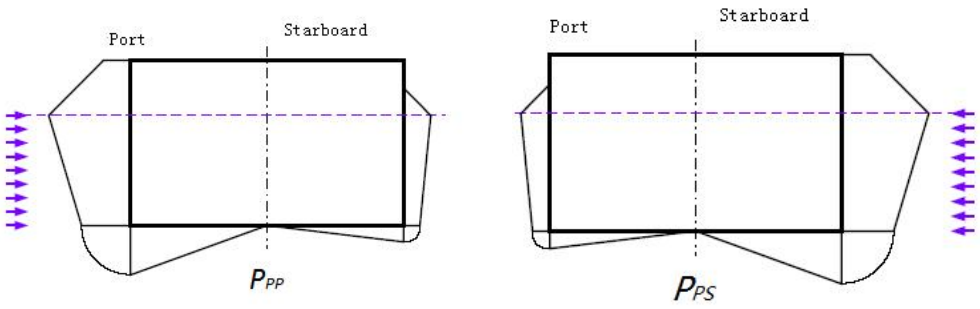

Figure 2.6.5 Distribution of P_{PP} and P_{PS} amidships

2.6.6 For each load case, hydrodynamic pressure is to be corrected according to the following requirements:

(1) For the positive hydrodynamic pressure at the waterline, hydrodynamic pressure $P_{W,C}$ at the side above waterline is to be calculated according to the following formulae (see Figure 2.6.6 of this Chapter):

$$p_{W,C} = p_{W,WL} + \rho g(d_{LCi} - z) \qquad \text{kN/m}^2\text{, for} \quad d_{LCi} \leq z \leq h_W + d_{LCi}$$

$$p_{W,C} = 0 \qquad \text{kN/m}^2\text{, for} \quad z \geq h_W + d_{LCi}$$

where: $p_{W,WL}$ —positive hydrodynamic pressure at the waterline for the considered load case;

d_{LCi}—draught at hull transverse section considered in corresponding loading condition, to be taken as draught at midpoint of model length in corresponding loading condition for finite element stress analysis, in m;

z—vertical coordinate of load point, in m;

$$h_W = \frac{p_{W,WL}}{\rho g}, \text{ in m}$$

where: ρ —density of sea water, to be taken as 1.025 t/m^3.

(2) For the negative hydrodynamic pressure at the waterline, hydrodynamic pressure $P_{W,C}$ below the waterline is to be calculated according to the following formula (see Figure 2.6.6 of this Chapter):

$$p_{W,C} = \max[p_W, \rho g(z - d_{LCi})] \qquad \text{kN/m}^2$$

where: p_W —negative hydrodynamic pressure below waterline for load case considered;

d_{LCi}—draught at hull transverse section considered in corresponding loading condition, to be taken as draught at midpoint of model length in corresponding loading condition for finite element stress analysis, in m;

z—vertical coordinate of load point, in m.

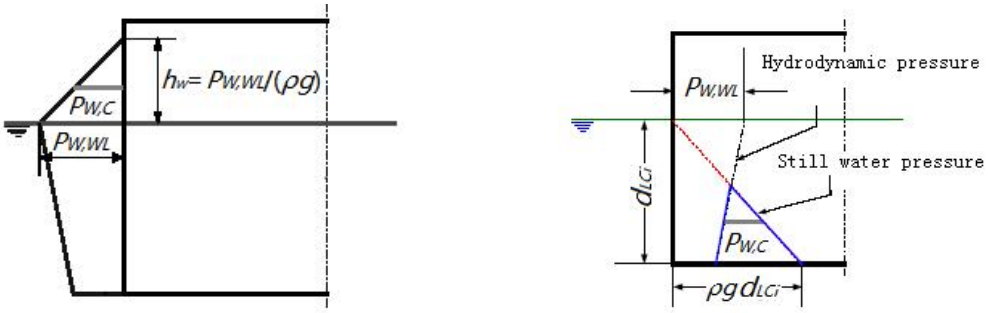

Positive hydrodynamic pressure at the waterline　　Negative hydrodynamic pressure at the waterline

Figure 2.6.6　Correction of hydrodynamic pressure

2.7　Internal pressure of dry bulk cargo

2.7.1　The upper surface of dry bulk cargo is to be determined according to the following requirements:

(1) Where the cargo hold is loaded up to top of hatch coaming, the upper surface of dry bulk cargo is an equivalent surface to be determined in considering the same loaded cargo volume within cargo hold (relevant parameter definitions are shown in Figure 2.7.1(1) of this Chapter).

Equivalent horizontal surface of dry bulk cargo is taken at h_C above the inner bottom, and h_C is to be calculated according to the following formula:

$$h_C = h_{HPU} + h_0 \qquad \text{m}$$

where: $h_0 = \frac{S_A}{B_H}$, in m;

$$S_A = S_0 + \frac{V_{HC}}{l_H}, \text{ in m}$$

where: h_{HPU}—vertical distance, in m, between inner bottom and lower intersection of top side tank and side shell or inner side; if there is no top side tank, the vertical distance, in m,

between inner bottom and intersection of upper deck and side shell or inner side;

S_0—shaded area, in m^2, above the lower intersection of top side tank and side shell or inner side, and up to the upper deck level, see Figure 2.7.2(1) of this Chapter; if there is no top side tank, shaded area, in m^2, above the intersection of upper deck and side shell or inner side, and up to the upper deck level;

V_{HC}—volume, in m^3, enclosed by the hatch coaming from upper deck to coaming top;

l_H—length of cargo hold, in m; if corrugated transverse bulkhead is provided, to be measured from midpoint of corrugated depth;

B_H—breadth of cargo hold at midpoint of length of cargo hold, in m.

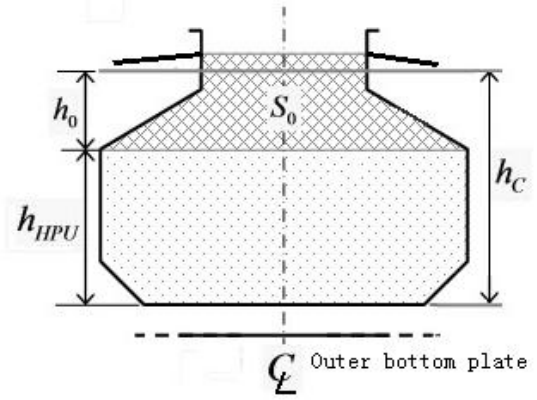

Figure 2.7.1(1) Definitions of h_C, h_0, h_{HPU} and S_0

(2) When the cargo hold is not loaded up to the upper deck, the upper surface of dry bulk cargo along hull transversely is a paraboloid (relevant parameter definitions are shown in Figure 2.7.1(2) of this Chapter). The position of upper surface is to be determined according to the volume of cargo in the cargo hold (to be taken as M / ρ_C).

Surface of dry bulk cargo is taken at h_C above the inner bottom, and h_C is to be calculated according to the following formulae:

$$h_C = h_y + h_2 + h_{HPL} \qquad \text{m, for } h_2 \geq 0$$

$$h_C = h_y + h_{22} \qquad \text{m, for } |y| \leq \frac{B_2}{2} \text{ and } h_2 < 0$$

$$h_C = 0 \qquad \text{m, for } |y| > \frac{B_2}{2} \text{ and } h_2 < 0$$

where: h_2—distance, in m, to be calculated according to the following formula:

$$h_2 = \frac{M}{\rho_C B_H l_H} - \frac{B_H + b_{IB}}{2B_H} h_{HPL} - \frac{B_H}{6} \tan\delta + \frac{V_{TS}}{B_H \cdot l_H} \qquad \text{m}$$

h_y—distance, in m, to be calculated according to the following formulae:

$$h_y = h_1 (1 - \frac{4y^2}{B_H^2}) \qquad \text{m, for } h_2 \geq 0$$

$$h_y = h_1 (1 - \frac{4y^2}{B_2^2}) \qquad \text{m, for } h_2 < 0$$

B_2—breadth of dry bulk cargo surface when $h_2<0$, in m, to be calculated according to the following formula:

$$B_2 = \sqrt{\frac{\frac{6}{l_H}\left(\frac{M}{\rho_C} + V_{TS}\right) + \frac{3B_{IB}^2}{B_H - B_{IB}} h_{HPL}}{\tan\delta + \frac{3h_{HPL}}{B_H - B_{IB}}}} \quad \text{m}$$

h_{22}—distance when $h_2<0$, in m, to be calculated according to the following formula:

$$h_{22} = h_{HPL}\left(\frac{B_2 - B_{IB}}{B_H - B_{IB}}\right) \quad \text{m}$$

h_{HPL}—vertical distance, in m, between inner bottom and upper intersection of hopper tank and side shell or inner side. h_{HPL} is to be taken equal to 0 if there is no hopper tank.

where: h_1—distance, in m, to be calculated according to the following formulae:

$$h_1 = \frac{B_H}{4}\tan\delta \quad \text{m, for } h_2 \geq 0$$

$$h_1 = \frac{B_2}{4}\tan\delta \quad \text{m, for } h_2 < 0$$

M—mass of cargo carried in cargo hold, in t;

V_{TS}—total volume, in m^3, of stools at bottom of transverse bulkheads within the cargo hold length ℓ_H. This volume excludes the part of hopper tank passing through the transverse bulkhead;

ρ_C —density of dry bulk cargo, in t/m^3, see 1.7.3 of Chapter 1;

B_H—breadth of cargo hold at midpoint of length of cargo hold, in m;

l_H—length of cargo hold, in m; if corrugated transverse bulkhead is provided, to be measured from midpoint of corrugated depth;

B_{IB}—breadth of inner bottom at midpoint of length of cargo hold, in m;

δ —angle of repose of cargo, to be taken as 35°;

y—transverse coordinate of load point, in m, weather side is taken as positive value;

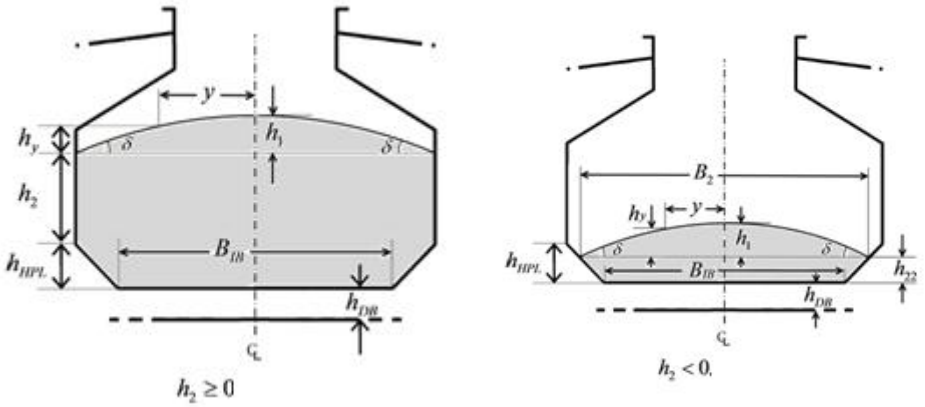

Figure 2.7.1(2) Definitions of h_y, h_1, h_2, h_{22} and h_{HPL}

2.7.2 Pressure p_{CS} of dry bulk cargo in still water is to be calculated according to the following formulae:

$$p_{CS} = \rho_C g K_C z_c \qquad \text{kN/m}^2, \text{ for } z_c \geq 0$$

$$p_{CS} = 0 \qquad \text{kN/m}^2, \text{ for } z_c < 0$$

where: ρ_C —density of dry bulk cargo, in t/m^3, see 1.7.3 of Chapter 1;

K_C—coefficient to be calculated according to the following formulae:

$K_C = \cos^2\alpha + \tan^2(45^\circ - 0.5\delta)\sin^2\alpha$ for inner bottom, hopper tank, transverse and longitudinal bulkheads, lower stool, vertical upper stool, inner side and side shell;

$K_C = 0$ for top side tank, upper deck and sloped upper stool;

where: α —angle, in deg, between panel considered and the horizontal plane;

δ —angle of repose of cargo, in deg, see 2.7.1(2) of this Chapter;

z_C —vertical distance, in m, from surface of dry bulk cargo to load point, to be calculated according to the following formula:

$$z_c = h_C + h_{DB} - z \qquad \text{m}$$

where: h_C—vertical distance, in m, from surface of dry bulk cargo to inner bottom, see 2.7.1 of this Chapter;

h_{DB}—height of double bottom, in m;

z—vertical coordinate of load point, in m.

2.7.3 Inertia pressure p_{CW} induced by dry bulk cargo is to be calculated according to the following formulae:

$$p_{CW} = \rho_C[0.25a_X(x_G - x) + 0.25a_Y(y_G - y) + 0.5K_C a_Z z_c] \text{ kN/m}^2 \text{ for } z_c \geq 0$$

$$p_{CW} = 0 \quad \text{for } z_c < 0$$

where: ρ_C , K_C—see 2.7.1(2) of this Chapter;

a_X, a_Y, a_Z —longitudinal, transverse and vertical acceleration at the centroid of cargo hold considered, in m/s^2, see 2.3.3 of this Chapter;

x_G, y_G—longitudinal and transverse coordinate at the centroid of cargo hold considered, in m;

z_c —see 2.7.2 of this Chapter;

x, y, z—longitudinal, transverse and vertical coordinate of load point, in m.

2.7.4 Total pressure p_C induced by dry bulk cargo is to be calculated according to the following formula and to be taken not less than zero:

$$p_C = p_{CS} + p_{CW} \qquad \text{kN/m}^2$$

where: p_{CS} —pressure of dry bulk cargo in still water, in kN/m^2, to be calculated according to 2.7.2;

p_{CW} —inertia pressure induced by dry bulk cargo, in kN/m^2, to be calculated according to 2.7.3.

2.8 Internal pressure of liquid

2.8.1 Static pressure p_{LS} due to liquid is to be calculated according to the following formula and to be taken not less than zero:

$$p_{LS} = \rho_L g(z_{TOP} - z) \qquad \text{kN/m}^2$$

where: ρ_L —density of internal liquid, in t/m^3, to be determined according to the following requirements:

ρ_L =0.9 for cargo oil

ρ_L =1.025 for ballast water

ρ_L =0.5 for LNG

Maximum cargo density of full tank, for other liquefied gas

z_{TOP} —vertical coordinate of tank top with the ship in the upright position, in m;

z—vertical coordinate of load point, in m.

2.8.2 Inertia pressure p_{LW} due to liquid is to be calculated according to the following formula:

$$p_{LW} = \rho_L[a_Z(z_B - z) + f_{ull-y}a_Y(y_B - y) + f_{ull-x}a_X(x_B - x)] \qquad \text{kN/m}^2$$

where: ρ_L —density of internal liquid, in t/m^3, see 2.8.1;

x_B—X coordinate of reference point, in m;
y_B—Y coordinate of reference point, in m;
z_B—Z coordinate of reference point, in m.

Reference point is taken as the point on upper boundary of tank which makes V_j maximum:

$$V_j = (a_Z + g)(z_j - z_G) + a_Y(y_j - y_G) + a_X(x_j - x_G)$$

where: x_j, y_j, z_j—X, Y and Z coordinate of point on upper boundary of tank respectively, in m;
x_G, y_G, z_G—X, Y and Z coordinate of tank centroid respectively, in m;
f_{ull-x}—longitudinal filling factor, to be calculated according to the following formulae and to be taken not less than 0 but not greater than 1:

$$f_{ull-x} = 0.5 + \frac{|z_B - z|}{l_{fs}\Phi} \qquad \text{for cargo hold filled with liquid cargo}$$

= 1.0 for other conditions

$f_{ull\text{-}y}$—transverse filling factor, to be calculated according to the following formulae and to be taken not less than 0 but not greater than 1:

$$f_{ull-y} = 0.5 + \frac{|z_B - z|}{b_{top}\theta}$$ for cargo hold filled with liquid cargo

= 1.0 for other conditions

a_X, a_Y, a_Z—longitudinal, transverse and vertical acceleration at the centroid of cargo hold considered, in m/s^2, see 2.3.3 of this Chapter;

x, y, z—longitudinal, transverse and vertical coordinate of load point, in m.

where: l_{fs}—length of top of compartment, in m;

b_{top}—breadth of top of compartment, in m;

Φ—maximum pitch angle, in rad, see 2.3.1(4) of this Chapter;

θ—maximum roll angle, in rad, see 2.3.1(3) of this Chapter.

2.8.3 Total pressure p_L due to liquid is to be calculated according to the following formula and to be taken not less than zero:

$$p_L = p_{LS} + p_{LW} \quad \text{kN/m}^2$$

where: p_{LS}—static pressure due to liquid, in kN/m^2, to be calculated according to 2.8.1;

p_{LW}—inertia pressure due to liquid, in kN/m^2, to be calculated according to 2.8.2.

2.9 Loads of container cargo

2.9.1 Assuming the cargo hold is loaded with some standard container stacking which is generally composed of TEU, container weight is taken as maximum container weight under full load condition in loading manual and height of center of gravity of stacking is taken as half of stacking height.

2.9.2 Assuming all containers within corresponding cargo hold on the hatch cover is an integral mass block, the weight of which is taken as the maximum cargo weight within corresponding cargo hold in full load condition in loading manual, and the height of center of gravity is taken as half of maximum stacking height corresponding to maximum cargo weight.

2.9.3 Load induced by container cargo is to be calculated according to the following formulae:

X direction: $W_{CX} = -m_C a_X$ kN

Y direction: $W_{CY} = -m_C a_Y$ kN

Z direction: $W_{CZ} = -f_z m_C g - m_C a_Z$ kN

where: m_C—weight of standard stacking in the cargo hold or gross weight of containers on hatch cover, in t;

a_X , a_Y , a_Z —acceleration at center of gravity of standard stacking in cargo hold or acceleration at center of gravity of container cargo on hatch cover, in m/s^2, see 2.3.3 of this Chapter;

f_z—factor of vertical static load of container cargo, to be calculated according to the following formulae:

$f_z = \cos\theta$, for R1P, R1S, R2P and R2S conditions

$= 1$, for other conditions

Where: θ—maximum roll angle, see 2.3.1 of this Chapter;

X direction load is positive forward, Y direction load is positive at port and Z direction load is positive upwards.

2.9.4 Load induced by container cargo is to be applied at container feet.

2.10 Loads of vehicle carrier

Load acting on the vehicle deck is to be calculated according to the following formulae:

X direction: $P_X = -Pa_X$ kN/m^2

Y direction: $P_Y = -Pa_Y$ kN/m^2

Z direction: $P_C = -f_z Pg - Pa_Z$ kN/m^2

where: P — actual load of vehicle deck, in t/m^2;

a_X , a_Y , a_Z —acceleration of center of gravity of vehicle in cargo hold;

f_z—factor of vertical static load of vehicle deck, to be calculated according to the following formulae:

$f_z = \cos\theta$, for R1P, R1S, R2P and R2S conditions

$= 1$, for other conditions

Where: θ—maximum roll angle, see 2.3.1 of this Chapter.

2.11 Loads of gravity of liquefied gas carriers

The influence of gravity is to be considered for liquefied gas carriers.

CHAPTER 3 FATIGUE ASSESSMENT

3.1 General requirements

3.1.1 The fatigue strength assessment is to be carried out in accordance with the design stress range in way of hot spot, taking into account the time in port or repair time, the result of which may be expressed by cumulative damage or fatigue life.

3.1.2 Total cumulative damage D of structure in its design service life is to meet the requirements of the following formula:

$$\text{Total cumulative damage} \quad D \le \frac{20}{T_D}$$

where: T_D—design fatigue life, in year.

3.1.3 The design fatigue life of hull structure is not to be less than 20 years.

3.2 Guidance on design of hull structural details

3.2.1 Structural details designs of bulk carriers, oil tankers and container ships are given in Appendix to the Guidelines for the purpose of providing technical guidance (non-mandatory requirements) for designers in the design improvement of structural details of critical locations in order to increase structural fatigue life.

3.3 Design stress range

3.3.1 Design stress range $S_{D(k)}$ for loading condition "(k)" is to be calculated according to the following formula:

$$S_{D(k)} = \max(f_{m,i(k)} f_t f_{material} S_{h,i(k)}) \quad \text{N/mm}^2$$

where: $S_{h,i(k)}$—hot spot stress range, in N/mm^2, for load case "i" of loading condition "(k)" , see Chapter 4 or Chapter 5;

$f_{m,i(k)}$—correction factor of hot spot average stress for load case "i" of loading condition "(k)" , see 3.3.2 of this Chapter;

f_t—correction factor of plate thickness, see 3.3.3 of this Chapter;

$f_{material}$—correction factor of material strength, see 3.3.4 of this Chapter.

3.3.2 Correction factor $f_{m(k)}$ for hot spot average stress for loading condition "(k)" is to be determined according to the following requirements:

(1) For welded joints

$$f_{m,i(k)} = \min\left[1.0, 0.85 + 0.3\frac{\sigma_{m,i(k)}}{C_s S_{h,i(k)}}\right] \qquad \text{for } \sigma_{m,i(k)} \ge 0$$

$$f_{m,i(k)} = \max\left[0.7, 0.85 + 0.3\frac{\sigma_{m,i(k)}}{C_s S_{h,i(k)}}\right] \qquad \text{for } \sigma_{m,i(k)} < 0$$

(2) For base material free edge

$$f_{m,i(k)} = \min\left[1.0, 0.8 + 0.4\frac{\sigma_{m,i(k)}}{C_s S_{h,i(k)}}\right] \qquad \text{for } \sigma_{m,i(k)} \geq 0$$

$$f_{m,i(k)} = \max\left[0.6, 0.8 + 0.4\frac{\sigma_{m,i(k)}}{C_s S_{h,i(k)}}\right] \qquad \text{for } \sigma_{m,i(k)} < 0$$

where: $\sigma_{m,i(k)}$—hot spot average stress, in N/mm^2, for load case "*i*" of loading condition "(*k*)";

$S_{h,i(k)}$—hot spot stress range, in N/mm^2, for load case "*i*" of loading condition "(*k*)";

C_s—coefficient to be calculated according to the following formula:

$$C_s = 1.6 + 0.0025L$$

where: L is length of ship, in m.

3.3.3 Correction factor f_t for plate thickness is to be calculated according to the following formulae:

$$f_t = 1.0 \qquad \text{for } t \leq 22$$

$$f_t = \left(\frac{t}{22}\right)^n \qquad \text{for } t > 22$$

where: n—coefficient, see Table 3.3.3 of this Chapter;

t—plate thickness at hot spot, in mm, to be determined according to the following requirements:

For simplified stress analysis, no plate thickness correction for flat bar and bulb profile, and face plate thickness for angle bar and T-bar; for finite element stress analysis, plate thickness of structure where the crack is likely to initiate and propagate.

Table 3.3.3

Structural details	Sketches	Condition	Coefficient n
Cruciform joints, transverse T-joints, with weld perpendicular to the direction of load	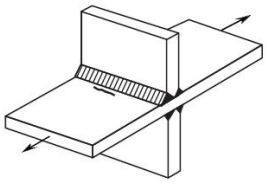	As-welded	0.25
	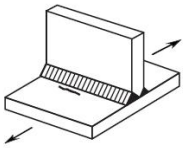	Weld toe treated by post-weld improvement method	0.2
Butt joints, with weld perpendicular to the direction of load		As-welded	0.2

Structural details	Sketches	Condition	Coefficient n
		Ground flush or weld toe treated by post-weld improvement method	0.1
Butt welds, attachments on plate edge, with weld parallel to the direction of load	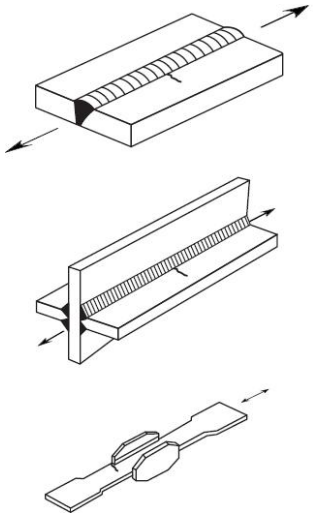	As-welded	0.1
		Weld toe treated by post-weld improvement method	0.1
Attachments on the flat bar or bulb profile, with weld parallel to the direction of load	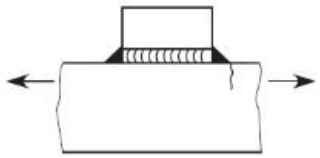	As-welded	0
		Weld toe treated by post-weld improvement method	0
Longitudinal attachments and doubling plates	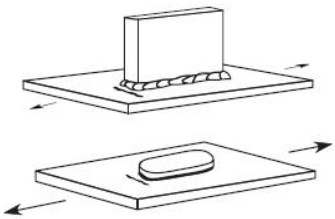	As-welded	0.2
		Weld toe treated by post-weld improvement method	0.1
Longitudinal attachments and doubling plates supported longitudinally	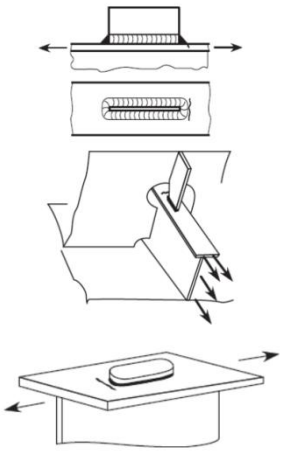	As-welded	0.1
		Weld toe treated by post-weld improvement method (1)	0
Machine-cutting e.g. by a thermal process or sheared edge cutting	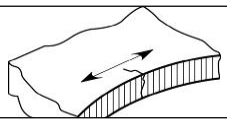	Cutting edges chamfered or rounded	0.1

Structural details	Sketches	Condition	Coefficient n
Manually thermally cut e.g. by flame cutting			

3.3.4 Correction factor for material strength is to be calculated according to the following formulae:

$$f_{material} = \frac{1200}{965 + \mathrm{R}_{eH}} \qquad \text{for base material free edge;}$$

$$f_{material} = 1 \qquad \text{for welded details;}$$

where: R_{eH} — yield strength of material, in N/mm^2, in accordance with Section 3, Chapter 1, PART TWO of CCS Rules for Classification of Sea-going Steel Ships.

3.4 Selection of design S-N curves

3.4.1 For welded details, D curve is selected for fatigue strength assessment.

3.4.2 For base material free edge, C curve is selected for fatigue strength assessment.

3.5 Calculation of fatigue cumulative damage

3.5.1 Cumulative damage D_k of structural details for loading condition "(k)" is to be calculated according to the following formula:

$$D_k = \frac{N_D \alpha_k}{K} \frac{S_{D(k)}{}^m}{\left(\ln N_L\right)^{m/\xi_k}} \mu_k \Gamma\left(1 + \frac{m}{\xi_k}\right)$$

where: N_D—total number of load cycles experienced by ship in its 20 years' service, usually to be taken as 0.65×10^8;

N_L—number of cycles for load spectrum in restoring period, to be taken as 10^2;

α_k —time distribution factor for loading condition "(k)", see 1.7 of Chapter 1 of the Guidelines;

K—factor for S-N curve, see Table 3.5.1 of this Chapter;

$S_{D(k)}$ —design stress range for loading condition "(k)", in N/mm^2;

ξ_k—Weibull shape parameter for loading condition "(k)", to be taken as 1;

$$\mu_k = 1.0 - \frac{\gamma\left(1 + \frac{m}{\xi_k}, \nu_k\right) - \nu_k^{-\frac{\nabla m}{\xi_k}} \gamma\left(1 + \frac{m + \nabla m}{\xi_k}, \nu_k\right)}{\Gamma\left(1 + \frac{m}{\xi_k}\right)}$$

$$\nu_k = \left(\frac{S_q}{S_{D(k)}}\right)^{\xi_k} \ln N_L$$

m—inverse slope of S-N curve, to be taken as 3;

∇m—difference of inverse slope of two-slope S-N curves, to be taken as 2;

$\gamma(x,v)$—incomplete GAMMA function value, to be calculated according to the following formula:

$$\gamma(x,v)=\int_0^v u^{x-1}e^{-u}du$$

Γ—complete GAMMA function value, to be calculated according to the following formula:

$$\Gamma(x)=\int_0^\infty u^{x-1}e^{-u}du$$

S_q—stress amplitude values at intersection point of two-slope S-N curves, see Table 3.5.1 of this Chapter.

Table 3.5.1

S-N curve	K	S_q
C	3.464×10^{12}	70.2305
D	1.520×10^{12}	53.3680

3.5.2 Total cumulative damage of structural details is to be calculated according to the following formula:

$$D=\sum D_k$$

where: D_k—cumulative damage of structural details in each loading condition, see 3.5.1 of this Chapter.

3.6 Calculation of fatigue life

3.6.1 Structure fatigue life is to be calculated according to the following formula:

$$T_F=\frac{20}{D}$$

where: D—total cumulative damage of structural details, see 3.5.2 of this Chapter.

3.7 Weld improvement methods

3.7.1 Post-weld fatigue strength improvement methods are to be considered as a supplementary means of achieving the required fatigue life, and subjected to quality control procedures.

3.7.2 For structural details where the benefit of post-weld treatment is applicable, the calculated fatigue life at the design stage for the considered structural detail excluding the post-weld treatment effects, is not to be less than T_{DF} / 1.47. However, for structural details inside a cargo hold the calculated fatigue life at design stage excluding post-weld treatment effects is not to be less than 20 years.

3.7.3 There is one basic post-weld treatment method considered to improve fatigue strength at the fabrication stage, i.e. weld geometry control and defect removal method by burr grinding.

3.7.4 The improvement method is applied to the weld toe. Thus, it is intended to increase the fatigue life of the weld from the viewpoint of a potential fatigue failure arising at the weld toe. The

possibility of failure initiation at other locations is always to be considered. If the failure is shifted from the weld toe to the root by applying post-weld treatment, there may be no significant improvement in the overall fatigue performance of the joint. Improvements of the weld root cannot be expected from treatment applied to weld toe. A brief description of the method and the degree of improvement which can be achieved is given in 3.7.6.

3.7.5 When weld improvements are planned, full or partial penetration welds for post-weld treatment are to be used to mitigate or to eliminate the possibility of cracking at the weld root.

3.7.6 The weld may be machined using a burr grinding tool to produce a favourable shape to reduce stress concentrations and remove defects at the weld toe, see Figure 3.7.6. In order to eliminate defects, such as intrusions, undercuts and cold laps, the material in way of the weld toe is to be removed. The depth of grinding shall be at least 0.5mm below the bottom of any visible undercut. The total depth of the burr grinding is not to be greater than the lesser of 2 mm and of 7% the local gross thickness of the machined plate. Any undercut not complying with this requirement is to be repaired by an approved method.

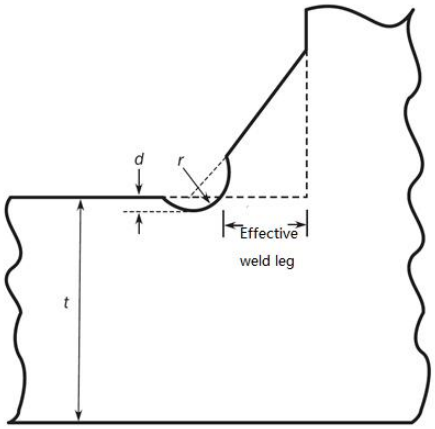

Figure 3.7.6 Details of ground weld toe geometry

3.7.7 To avoid introducing a detrimental notch effect due to small radius grooves, the burr diameter is to be scaled to the plate thickness at the weld toe being ground. The diameter is to be in the 10 to 25 mm range for application to welded joints with plate thickness from 10 to 50 mm. The resulting root radius of the groove is to be no less than 0.25*t.* The weld throat thickness and leg length after burr grinding must comply with the rule requirements or any increased weld sizes as indicated on the approved drawings.

The inspection procedure is to include a check of the weld toe radius, the depth of burr grinding, and confirmation that the weld toe undercut has been removed completely.

3.7.8 The benefit of burr grinding corresponds to a reduction of the effective stress range of fatigue strength by 1.3, reducing the cumulative damage to *D*/2.2,

3.7.9 Applicability of burr grinding

(1) The weld type complies with 3.7.5.

(2) The weld improvement is effective in improving the fatigue strength of structural details under high cycle fatigue conditions therefore the fatigue improvements factors do not apply to low-cycle fatigue conditions, i.e. when $N \leq 5\times10^4$, where N is the number of life cycles to failure.

(3) Unless otherwise specifically stated, the fatigue improvement factor is to be used for welds, joining steel plates which are between 6 and 50 mm thick.

(4) Fatigue improvement factor is to be applied to as-welded transverse butt welds, as-welded T-joint and cruciform welds and as-welded longitudinal attachment welds excluding longitudinal end connections.

(5) In way of areas prone to mechanical damage, fatigue improvement may only be granted if these are adequately protected.

(6) Treatment of inter-bead toes is required for large multi-pass welds as shown in Figure 3.7.9.

(7) The builder is to provide the list of details and their locations on the ship for which the post-weld treatment has been applied.

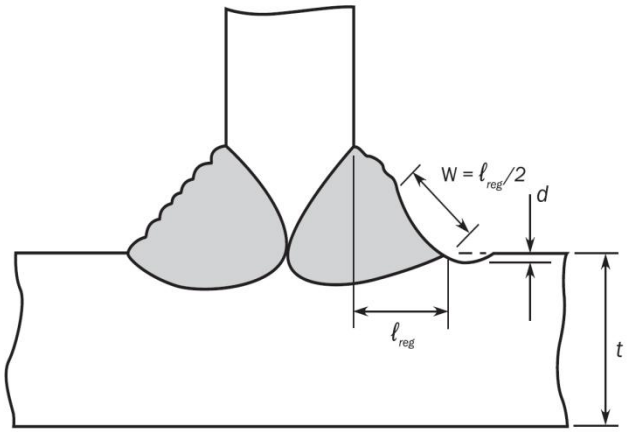

l_{leg}: Weld leg length. W : Width of groove. d : Depth of grinding.

Figure 3.7.9 Extent of weld toe burr grinding to remove inter-bead toes on weld face

CHAPTER 4 SIMPLIFIED STRESS ANALYSIS

4.1 General requirements

4.1.1 Simplified stress analysis is applicable to fatigue strength assessment of connecting joints of end of longitudinals, and hot spots are in way of weld toes of connecting joints of end of longitudinals.

4.1.2 The hot spot stress ranges and hot spot mean stresses of longitudinals are to be calculated according to type and position of end connection of longitudinals and by considering stress concentration factors for different end connection type based on loading conditions specified in 1.7 of Chapter 1.

4.1.3 For simplified stress analysis, the following nominal stress components are to be considered:

(1) hull girder bending normal stress;

(2) bending normal stress of longitudinals under lateral load.

4.2 Hot spot stress ranges and hot spot mean stress based on simplified analysis

4.2.1 Hot spot stress range $S_{h,i(k)}$ for load case "*i*" of loading condition "(*k*)" is to be calculated according to the following formula:

$$S_{h,i(k)} = \left|\sigma_{h,i1(k)} - \sigma_{h,i2(k)}\right| \quad \text{N/mm}^2$$

where: $\sigma_{h,i1(k)}$, $\sigma_{h,i2(k)}$ —hot spot stress for load case "*i*" of loading condition "(*k*)", in N/mm^2, see 4.4.1 of this Chapter.

4.2.2 Hot spot mean stress for load case "*i*" of loading condition "(*k*)" is to be calculated according to the following formula:

$$\sigma_{m,i(k)} = \frac{\sigma_{h,i1(k)} + \sigma_{h,i2(k)}}{2} \quad \text{N/mm}^2$$

where: $\sigma_{h,i1(k)}$, $\sigma_{h,i2(k)}$ —hot spot stress for load case "*i*" of loading condition "(*k*)", in N/mm^2, see 4.4.1 of this Chapter.

4.3 Calculation of nominal stress components

4.3.1 Nominal stress component $\sigma_{nh,ij(k)}$ due to hull girder loads for load case "*ij*" of loading condition "(*k*)" is to be calculated according to following formula:

$$\sigma_{nh,ij(k)} = \sigma_{SW,(k)} + C_{WV,ij}\sigma_{WV,ij} + C_{WH,ij}\sigma_{WH,(k)} \quad (j = 1,2) \text{ N/mm}^2$$

where: $\sigma_{SW,(k)}$ —hull girder bending normal stress due to still water bending moment, in N/mm^2, to be calculated according to following formula:

$$\sigma_{SW,(k)} = \frac{M_{SW,(k)}(z - z_{NA})}{I_Y} \times 10^{-3} \text{ N/mm}^2$$

$\sigma_{WV,ij}$ —hull girder bending normal stress due to vertical wave bending moment, in N/mm^2;

$$\sigma_{WV,i1} = \frac{M_{WV,S}(z - z_{NA})}{I_Y} \times 10^{-3} \qquad \text{for sagging condition;}$$

$$\sigma_{WV,i2} = \frac{M_{WV,H}(z - z_{NA})}{I_Y} \times 10^{-3} \qquad \text{for hogging condition;}$$

$\sigma_{WH,(k)}$ —hull girder bending normal stress due to horizontal wave bending moment, in N/mm^2;

$$\sigma_{WH,(k)} = \frac{M_{WH} y}{I_Z} \times 10^{-3}$$

$C_{WV,ij}$, $C_{WH,ij}$ —load combination factor of hull girder vertical wave bending moment and horizontal wave bending moment, see Table 2.5.3 of Chapter 2 of the Guidelines;

$M_{SW,(k)}$ —still water bending moment in corresponding loading condition, in kN·m;

$M_{WV,S}$, $M_{WV,H}$ —vertical wave bending moment for sagging and hogging, in kN·m;

$M_{WH,(k)}$ —horizontal wave bending moment, in kN·m;

y, *z*—transverse and vertical coordinate of calculation point, in m;

z_{NA} —vertical coordinate of neutral axis, in m;

I_Y, I_Z—inertial moment of hull section to transverse and vertical neutral axis respectively, in m^4.

4.3.2 Nominal stress component $\sigma_{nl,ij(k)}$ due to lateral load for load case "*ij*" of loading condition "(*k*)" is to be calculated according to following formula:

$$\sigma_{nl,ij(k)} = \frac{C_d\left(\eta_{SW} P_{SW,ij(k)} + \eta_L P_{L,ij(k)} + \eta_C P_{C,ij(k)}\right) s l^2}{12 W_s} \left(6\left(\frac{x}{l}\right)^2 - 6\left(\frac{x}{l}\right) + 1\right) \times 10^3 \quad (j = 1,2) \qquad \text{N/mm}^2$$

where: *s*—spacing of longitudinal stiffener, in m;

l—span of longitudinal stiffener, in m, see Figure 4.3.2 of this Chapter;

x—distance from longitudinal stiffener span end to hot spot, in m, see Figure 4.3.2 of this Chapter;

W_s—section modulus, in cm^3, of stiffener with an attached plating;

C_d—relative displacement correction coefficient, to be determined according to following requirements:

C_d =1.3 bottom (inner bottom) longitudinal stiffener end details at transverse bulkhead of cargo hold;

C_d =1.2 for side (inner shell) longitudinal stiffener end details at transverse bulkhead of cargo hold;

C_d =1.15 for deck longitudinal stiffener end details at transverse bulkhead of cargo hold;

C_d =1.0 for others.

Relative displacement correction coefficient can also be determined by direct calculation.

$P_{SW,ij(k)}$, $P_{L,ij(k)}$, $P_{C,ij(k)}$ —sea water pressure, liquid pressure or dry bulk cargo pressure respectively at mid span of longitudinal stiffener, in kN/m^2;

η_{SW} , η_L , η_C —coefficient for direction of lateral load pressure; when the considered pressure is applied on the stiffener side, to be taken as 1; when otherwise, to be taken as -1.

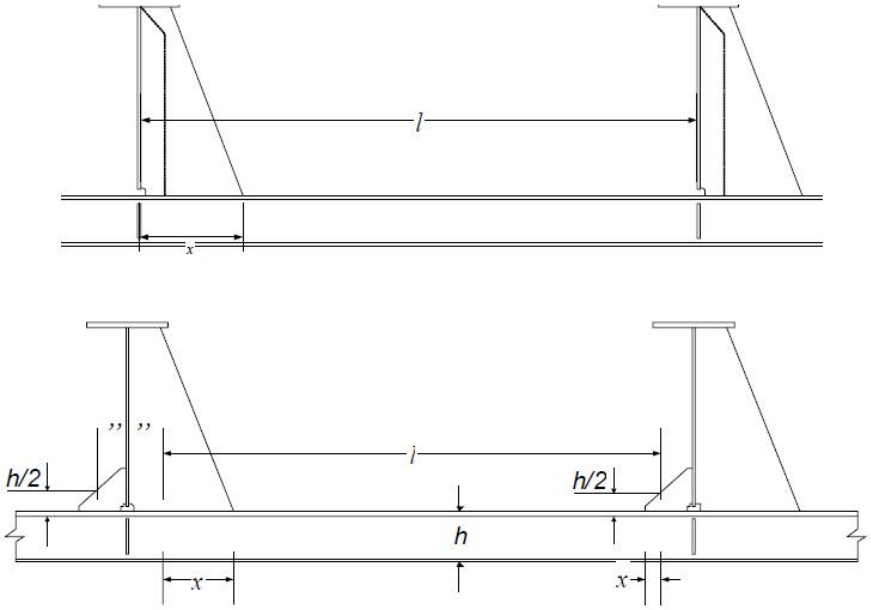

Figure 4.3.2(1) Single-hull construction

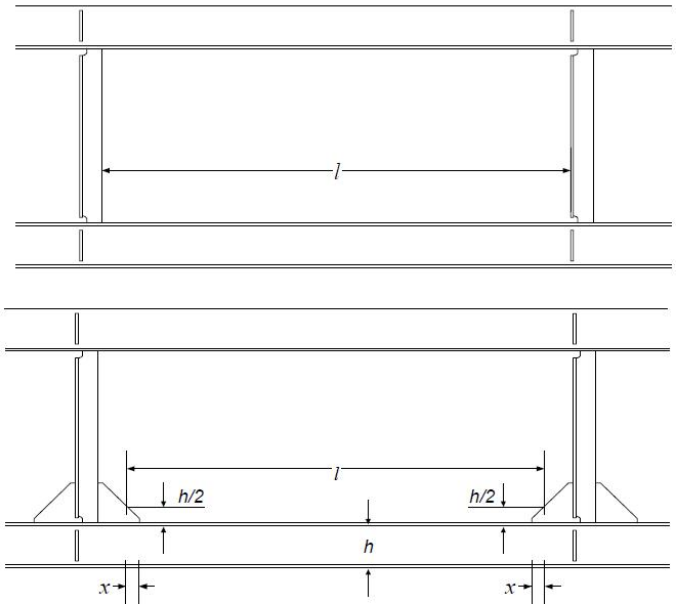

Figure 4.3.2(2) Double-hull construction

4.4 Calculation of hot spot stress

4.4.1 Hot spot stress for load case "*ij*" of loading condition "(*k*)" is to be calculated according to following formula:

$$\sigma_{h,ij(k)} = C_g f_{ch} K_{gh} \sigma_{nh,ij(k)} + f_{cl} K_{gl} K_n \sigma_{nl,ij(k)} \qquad (j = 1, 2) \qquad \text{N/mm}^2$$

where: $\sigma_{nh,ij(k)}$ —nominal stress component due to hull girder bending moment, in N/mm^2, see 4.3.1 of this Chapter;

$\sigma_{nl,ij(k)}$ —nominal stress component due to lateral load, in N/mm^2, see 4.3.2 of this Chapter;

K_n —stress concentration factor due to unsymmetrical stiffener geometry, see 4.5.2 of this Chapter;

K_{gh} —stress concentration factor for longitudinal stiffener due to axial load, see Table 4.5.1 of this Chapter;

K_{gl} —stress concentration factor for longitudinal stiffener due to lateral load, see Table 4.5.1 of this Chapter;

f_{ch}, f_{cl}—corrosion correction factor, see 1.6.1 of Chapter 1;

C_g —panel bending correction factor, to be determined according to the following requirements:

C_g=1.1 for bottom (inner bottom) longitudinal stiffener end details;

C_g=1.05 for side (inner shell) longitudinal stiffener end details;

C_g=1.0 for deck longitudinal stiffener end details.

Panel bending correction factor can also be determined by direct calculation.

4.5 Stress concentration factors

4.5.1 Stress concentration factors for longitudinal symmetrical stiffener end connections due to axial load and lateral load are shown in Table 4.5.1, and can also be determined by direct calculation according to 4.5.3 of this Section.

Stress concentration factors **Table 4.5.1**

No.	Connection type	Point A		Point B	
		K_{gh}	K_{gl}	K_{gh}	K_{gl}
1	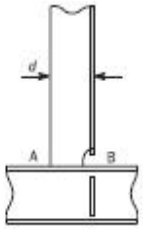	1.28 (d ≤ 150) 1.36 (150＜d ≤ 250) 1.45 (d >250)	1.40 (d ≤ 150) 1.50 (150＜d ≤ 250) 1.60 (d >250)	1.28 (d ≤ 150) 1.36 (150＜d≤250) 1.45 (d >250)	1.6
2	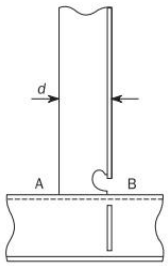	1.28 (d ≤ 150) 1.36 (150＜d ≤ 250) 1.45 (d >250)	1.40 (d ≤ 150) 1.50 (150＜d ≤ 250) 1.60 (d >250)	1.14 (d ≤ 150) 1.24 (150＜d≤ 250) 1.34 (d >250)	1.27
3	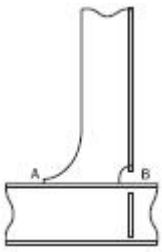	1.28	1.34	1.52	1.67
4	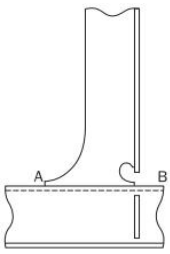	1.28	1.34	1.34	1.34

No.	Connection type	Point A		Point B	
		K_{gh}	K_{gl}	K_{gh}	K_{gl}
5	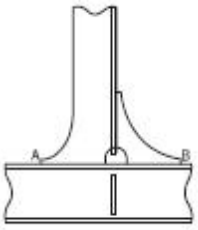	1.28	1.34	1.28	1.34
6	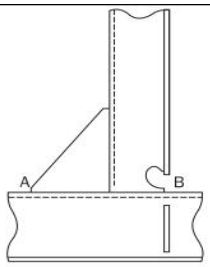	1.52	1.67	1.34	1.34
7	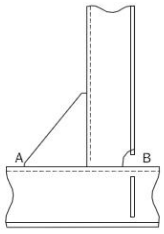	1.52	1.67	1.52	1.67
8	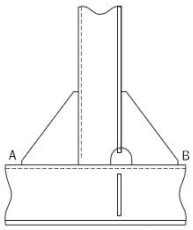	1.52	1.67	1.52	1.67
9	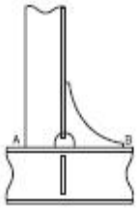	1.52	1.67	1.28	1.34
10	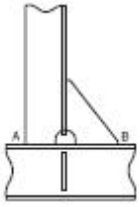	1.52	1.67	1.52	1.67

No.	Connection type	Point A		Point B	
		K_{gh}	K_{gl}	K_{gh}	K_{gl}
11	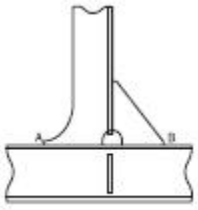	1.28	1.34	1.52	1.67
12	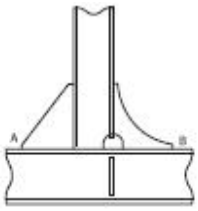	1.52	1.67	1.28	1.34
13		1.52	1.67	1.52	1.67
14	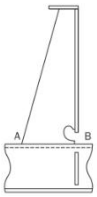	1.52	1.67	1.34	1.34
15	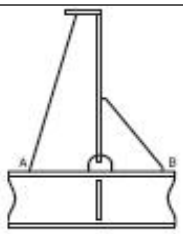	1.52	1.67	1.52	1.67
16	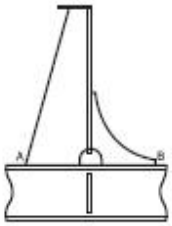	1.52	1.67	1.28	1.34
17		1.28	1.34	1.52	1.67

No.	Connection type	Point A		Point B	
		K_{gh}	K_{gl}	K_{gh}	K_{gl}
18	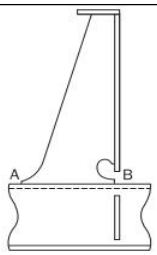	1.28	1.34	1.34	1.34
19	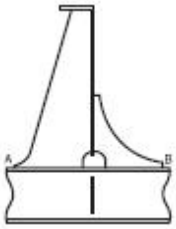	1.28	1.34	1.28	1.34
20	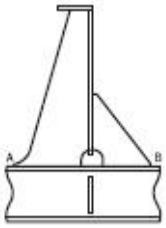	1.28	1.34	1.52	1.67
21	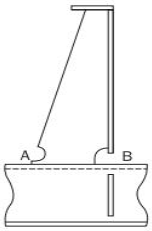	1.28	1.34	1.52	1.67
22	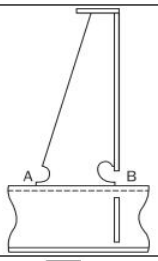	1.28	1.34	1.34	1.34
23	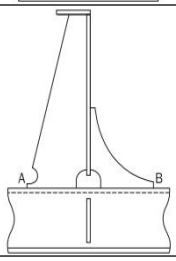	1.28	1.34	1.28	1.34
24	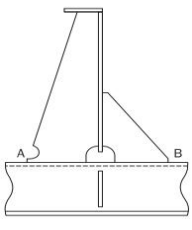	1.28	1.34	1.52	1.67

No.	Connection type	Point A		Point B	
		K_{gh}	K_{gl}	K_{gh}	K_{gl}
25	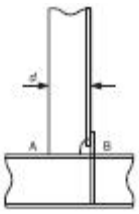	1. 28 ($d \leq 150$) 1.36 ($150 < d \leq 250$) 1. 45 ($d > 250$)	1. 40 ($d \leq 150$) 1.50 ($150 < d \leq 250$) 1. 60 ($d > 250$)	1. 14 ($d \leq 150$) 1.24 ($150 < d \leq 250$) 1. 34 ($d > 250$)	1. 25 ($d \leq 150$) 1.36 ($150 < d \leq 250$) 1. 47 ($d > 250$)
26	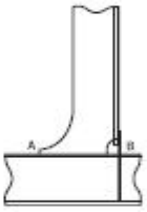	1.28	1.34	1.34	1.47
27	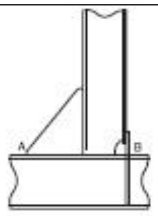	1.52	1.67	1.34	1.47
28		1.52	1.67	1.34	1.47
29		1.28	1.34	1.34	1.47
30	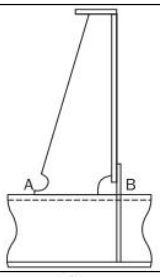	1.28	1.34	1.34	1.47
31	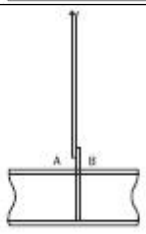	1.13	1.20	1.13	1.20

No.	Connection type	Point A		Point B	
		K_{gh}	K_{gl}	K_{gh}	K_{gl}
32	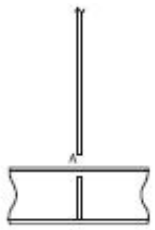	1.13	1.14	N/A	N/A

Notes: ① The attachment length *d*, in mm, is defined as the length of the welded attachment on the longitudinal stiffener flange without deduction of scallop.
② Where the longitudinal stiffener is a flat bar and there is a web stiffener/bracket welded to the flat bar stiffener, the stress concentration factor listed in the table is to be multiplied by a factor of 1.12 when the thickness of the web stiffener/bracket is thicker than the 0.7 times thickness of flat bar stiffener. This also applies to unsymmetrical profiles where there is less than 8 mm clearance between the edge of the stiffener flange and the attachment, e.g. bulb or angle profiles where the clearance of 8 mm cannot be achieved.
③ ID 31 and 32 refer to details where web stiffeners are omitted or not connected to the longitudinal stiffener flange. For connection type ID 32 with no collar /diaphragm web plate welded to the flange, the stress concentration factors provided in this table are to be used irrespective of slot configuration. The fatigue assessment point 'A' is located at the connection between the stiffener web and the transverse web frame or lug plate.

4.5.2 Stress concentration factors K_n due to unsymmetrical stiffener geometry are to be calculated according to following formulae:

$$K_n = 1.03 \quad \text{for bulb steel;}$$

$$K_n = \frac{1+\lambda\beta^2}{1+\lambda\beta^2\psi_z} \quad \text{for others}$$

where: β —factor, to be taken as $1\text{-}2b_g/b_f$;

b_g —breadth from web centerline to wing plate, in mm, see Figure 4.5.2;

b_f —breadth of wing plate, in mm;

t_f —thickness of wing plate, in mm;

h_{stf} —web height, in mm

t_w —web thickness, in mm;

t_p —thickness of attached plate, in mm;

Z—section modulus of stiffener, in cm^3;

λ —coefficient to be taken as $\dfrac{3\left(1+\dfrac{\eta}{280}\right)}{1+\dfrac{\eta}{40}}$;

ψ —coefficient to be taken as $\dfrac{h_{stf}^2 t_w}{4Z \times 10^3}$;

η —coefficient to be taken as $\dfrac{l^4}{b_f^3 t_f h_{stf}^2 \left(\dfrac{4h_{stf}}{t_w^3} + \dfrac{s}{t_p^3} \right)} \times 10^{12}$.

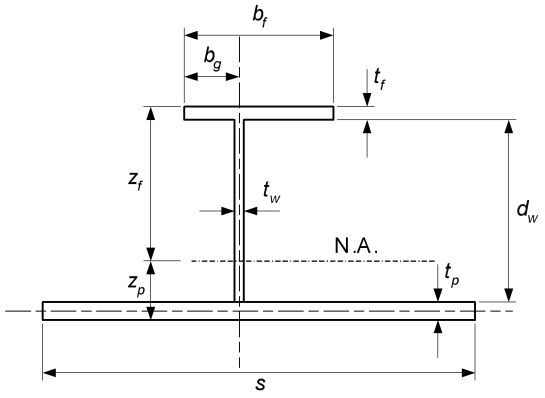

Figure 4.5.2

4.5.3 If connection types other than those given in Table 4.5.1 are adopted, fatigue strength can be assessed according to following requirements:

(1) hot spot stress is calculated directly by performing a very fine mesh finite element analysis. See Chapter 5 of the Guidelines;

(2) stress concentration factor is determined by finite element analysis. Stress concentration factor K_g is to be the ratio of finite element hot spot stress to nominal stress by simplified analysis:

$$K_g = \frac{\sigma_h}{\sigma_n}$$

where: σ_h —hot spot stress, in N/mm^2;

σ_n —nominal stress, in N/mm^2.

CHAPTER 5 FINITE ELEMENT STRESS ANALYSIS

5.1 General requirements

5.1.1 The methods for finite element hot spot stress analysis are applicable to fatigue strength assessment for both welded and non-welded details, taking into account structural discontinuities due to the structural detail of the welded joint, but not taking into account the notch effect at the weld toe.

5.1.2 Fatigue strength check based on finite element stress analysis is carried out by very fine mesh analysis. These very fine mesh models may be incorporated into the global model. Alternatively, this very fine mesh analysis can be carried out by means of separate local finite element models with very fine mesh zones in conjunction with the boundary conditions obtained from a global model of the cargo holds.

5.2 Structure modeling

5.2.1 Unless otherwise specified in the Guidelines, finite element structure modeling is to comply with relevant requirements of Section 5, Chapter 1, PART TWO of CCS Rules for Classification of Sea-going Steel Ships.

5.2.2 The extent of model is to be in compliance with the following requirements:

(1) Normally, the longitudinal extent is to cover the length of 1/2 hold + 1 hold + 1/2 hold within the cargo area amidships.

(2) Considering that transverse wave loads are not symmetrical, a full-breadth model is to be required.

(3) The vertical extent is to be taken as all members within the main hull, including all the primary members on the main deck.

5.2.3 For local fine mesh sub-model, the effect of displacement boundary condition and force boundary condition on fine mesh zone hot spot stress is to be avoided. The boundary of fine mesh zone is to be taken at adjacent primary supporting members such as girders, stringers and floors in the cargo hold.

5.2.4 Finite element meshes near hot spot are to be fine enough to reflect change of stress gradient. The size of mesh is not to be greater than thickness t of stressed members at hot spot. The mesh size is to be maintained within the very fine mesh zone, extending over at least 10 elements in all directions from the hot spot position. The transition of element size between the coarser mesh and the very fine mesh zone is to be done gradually and an acceptable mesh quality is to be maintained.

5.2.5 Four-node shell elements with adequate bending and membrane properties are to be used inside the very fine mesh zone. The shell elements are to represent the mid plane and bending of the plating. Triangular elements are to be avoided where possible. Use of distorted elements (e.g. element's corner angle less than 60° or greater than 120°) are to be avoided. Stiffeners inside fine mesh zone are to be modeled using plate elements, and stiffeners outside fine mesh zone are to be modeled using beam elements. The geometry of the weld and construction misalignment is not required to be modeled.

5.2.6 Where stresses are to be assessed on a free edge, such as cut-outs for stiffener connections at web frames, edge of plating and hatch corners, per unit area beam elements having the same depth as the adjoining plate thickness is to be used to obtain the required local edge stress values.

5.2.7 For finite element modeling of independent tank liquefied gas carriers, the state of support structures withstanding force is to be able to be simulated, and linear rod elements or spring elements may be used to simulate laminated wood. For details, please refer to the relevant chapters of CCS Rules for Construction and Equipment of Ships Carrying Liquefied Gases in Bulk.

5.3 Finite element analysis conditions

5.3.1 For finite element stress analysis, each calculation condition is based on global load case and local load case. Hot spot stress is to be obtained by stress combination of global load case and local load case and to be calculated according to following formula:

$$\sigma_{\mathrm{C}} = f_{ch}\sigma_{\mathrm{HG}} + C_{\mathrm{VT}} f_{cl}\sigma_{\mathrm{L}} \quad \mathrm{N/mm^2}$$

where: σ_{HG} —hot spot stress for global load case, in N/mm^2;

σ_{L} —hot spot stress for local load case, in N/mm^2;

f_{ch}, f_{cl}—corrosion correction coefficient, see 1.6.1 of Chapter 1;

C_{VT}—ship type correction coefficient, to be determined according to following requirements:

C_{VT} =0.75 for container ship

C_{VT} =0.85 for vehicle carrier

C_{VT} =0.80 for oil tanker, chemical tanker

C_{VT} =0.9 for bulk carrier

C_{VT} =0.95 for membrane tank liquefied gas carrier

C_{VT} =0.6 for hot spots at connection of ore carrier inner bottom plating to lower stool, independent tank liquefied gas carrier

C_{VT} =0.9 for other hot spots in ore carrier.

5.4 Boundary conditions

5.4.1 Boundary conditions for cargo hold FE model are to comply with following requirements:

(1) Boundary conditions for global load (see Table 5.4.1(1) of this Chapter)

(a) The degrees of freedom δ_x, δ_y and δ_z of each longitudinal member node for fore and aft end planes is to be linked to the independent point at neutral axis on longitudinal centerline section by means of MPC. Vertical bending moment and horizontal bending moment are to be applied on the independent point. Load combination factors for each load case are shown in Table 2.5.3, Chapter 2 of the Guidelines.

(b) The displacements of the independent point within fore and aft end planes in transverse direction, vertical direction and the rotation around longitudinal axes are restrained, i.e. $\delta_y = \delta_z = \theta_x = 0$; The displacement of the independent point within the fore end plane in longitudinal direction is restrained, i.e. $\delta_x = 0$.

Boundary conditions for global load **Table 5.4.1(1)**

Position	Displacement constraint			Rotation constraint		
	δ_x	δ_y	δ_z	θ_x	θ_y	θ_z
All longitudinal members for end planes	Link	Link	Link	-	-	-
Independent point (fore end plane)	Constraint	Constraint	Constraint	Constraint	Bending moment	Bending moment
Independent point (aft end plane)	-	Constraint	Constraint	Constraint	Bending moment	Bending moment

(2) Boundary conditions for local loads of oil tankers, chemical tankers, bulk carriers, container ships, membrane tank liquefied gas carriers, independent tank liquefied gas carriers and ore carriers (with symmetrical loads, see Table 5.4.1(2))

(a) Symmetrical conditions are applied respectively to fore and aft end planes, the displacements in longitudinal direction of nodes within the end plane and the rotations around the two coordinate axes within the end plane are restrained, i.e. $\delta_x = \theta_y = \theta_z = 0$;

(b) Vertical spring elements are to be fitted on intersection line of side shell plating/inner hull plating/longitudinal bulkhead with forward and aft bulkheads in midship cargo tanks. Elasticity coefficients for spring elements are distributed evenly and calculated according to following formula:

$$K = \frac{5GA}{6l_H n}$$

where: G—shear elastic modulus for material; for steel, G=0.792×10^5 N/mm^2;

A— shear area of side shell plating, inner hull plating or longitudinal bulkhead plate at forward and aft bulkheads, in mm^2;

l_H —length of midship cargo tank, in mm;

n—number of nodes of vertical intersections on side shell plating, inner hull plating or longitudinal bulkhead plate.

Boundary conditions for local loads (with symmetrical loads) **Table 5.4.1(2)**

Position	Displacement constraint			Rotation constraint		
	δ_x	δ_y	δ_z	θ_x	θ_y	θ_z
Fore and aft end planes	Constraint	-	-	-	Constraint	Constraint
Intersection of longitudinal centerline section at fore and aft transverse bulkheads with bottom	-	Constraint	-	-	-	-
Vertical intersections of side shell plating, inner hull plating and longitudinal bulkhead plate with forward and aft transverse bulkheads	-	-	Vertical spring	-	-	-

(3) Boundary conditions for local loads of oil tankers, chemical tankers, bulk carriers, container ships, membrane tank liquefied gas carriers, independent tank liquefied gas carriers and ore

carriers (with unsymmetrical loads, see Table 5.4.1(3))

(a) Symmetrical conditions are applied respectively to fore and aft end planes, the displacements in longitudinal direction of nodes within the end plane and the rotations around the two coordinate axes within the end plane are restrained, i.e. $\delta_x = \theta_y = \theta_z = 0$;

(b) Transverse spring elements are to be fitted on intersections of upper deck, trunk deck (if any), bottom plating/inner bottom plating with forward and aft bulkheads. Elasticity coefficients for spring elements are distributed evenly and calculated according to following formula:

$$K = \frac{5GA}{6l_H n}$$

where: G—shear elastic modulus for material; for steel, G=0.792×10^5 N/mm^2;

A—shear area of upper deck, trunk deck (if any), bottom plating and inner bottom plating at forward and aft bulkheads, in mm^2;

l_H—length of midship cargo tank, in mm;

n—number of nodes of horizontal intersections on upper deck, trunk deck (if any), bottom plating and inner bottom plating.

(c) Vertical spring elements are to be fitted on intersections of side shell plating/inner hull plating/longitudinal bulkhead with forward and aft bulkheads. Elasticity coefficients for spring elements are distributed evenly and shown in 5.4.1(2)(b) of this Chapter.

Boundary conditions for local loads (with unsymmetrical loads) **Table 5.4.1(3)**

Position	Displacement constraint			Rotation constraint		
	δ_x	δ_y	δ_z	θ_x	θ_y	θ_z
Fore and aft end planes	Constraint	-	-	-	Constraint	Constraint
Horizontal intersection line of upper deck, trunk deck (if any), bottom plating and inner bottom plating with forward and aft transverse bulkheads	-	Transverse spring	-	-	-	-
Vertical intersection line offside shell plating, inner hull plating and longitudinal bulkhead plate with forward and aft transverse bulkheads	-	-	Vertical spring	-	-	-

(4) Local load boundary conditions for vehicle carriers

(a) The same boundary conditions are used under various load conditions to constrain the rigid displacement and the unbalanced force generated by load. The specific location is shown in Table 5.4.1 (4) and Figure 5.4.1;

(b) In order to constrain the longitudinal displacement of the model, the displacement in x-

direction is constrained at one end of the inner bottom plating;

(c) In order to constrain the transverse displacement of the model, the displacement in y-direction is constrained at the edge line of one side of the inner bottom;

(d) In order to constrain the vertical displacement of the model, the displacement in z-direction is constrained at both ends of the side. The rigid rotation of the model can be controlled by the above displacement constraints.

(e) In order to simulate the constraints of the structural members adjacent to the model, the rotation around Y-axis is constrained at the fore and aft ends of bottom and deck girder.

Boundary conditions under various conditions **Table 5.4.1 (4)**

Constraint	$\delta_x = 0$	$\delta_y = 0$	$\delta_z = 0$	$\theta_y = 0$
Applied area	Line AD	Line AB	Lines AA', BB', CC', DD'	both ends of girders

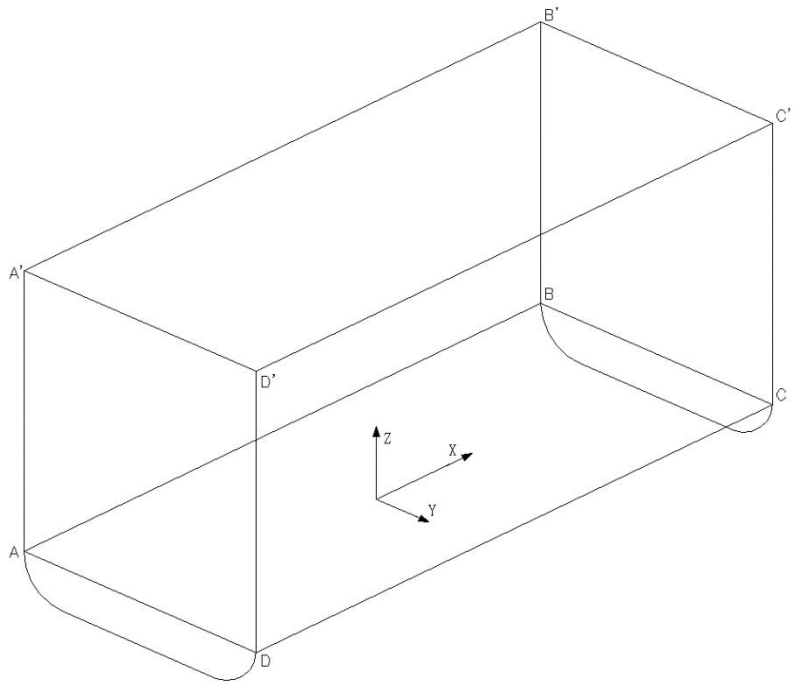

Figure 5.4.1 Positions where boundary conditions are applied

5.4.2 When local fine finite element model is used, nodal force or nodal displacement obtained from hold model is to be applied to sub-model.

5.5 Hot spot stress ranges and hot spot mean stress based on finite element analysis

5.5.1 Hot spot stress ranges and mean stress

(1) For load case "*i*" of loading condition "(*k*)", hot spot stress ranges $S_{h,i(k)}$ is to be hot spot principal stress within $\pm 45^{o}$ perpendicular to the weld toe and determined according to difference of hot spot stress components for load case i_1 and load case i_2;

(2) For load case "*i*" of loading condition "(*k*)", hot spot mean stress is to be determined according to average hot spot stress components for load case i_1 and load case i_2.

5.5.2 Hot spot stress calculation for weld type nodes

(1) For general weld type nodes (such as bracket toe ends) for load case "*ij*" of loading condition "(*k*)", hot spot stress $\sigma_{ij(k)}$ (see Figure 5.5.2(1) of this Chapter) is to be calculated according to following formula:

$$\sigma_{ij(k)} = \frac{3\sigma_{ij(k),t/2} - \sigma_{ij(k),3t/2}}{2} \qquad (j = 1,2) \qquad \text{N/mm}^2$$

where: $\sigma_{ij(k),t/2}$, $\sigma_{ij(k),3t/2}$ —stresses at stress read out points located at distances t/2 and 3t/2 away from the weld toe for load case "*ij*" of loading condition "(*k*)", in N/mm^2, where *t* is plate thickness at hot spot, in mm;

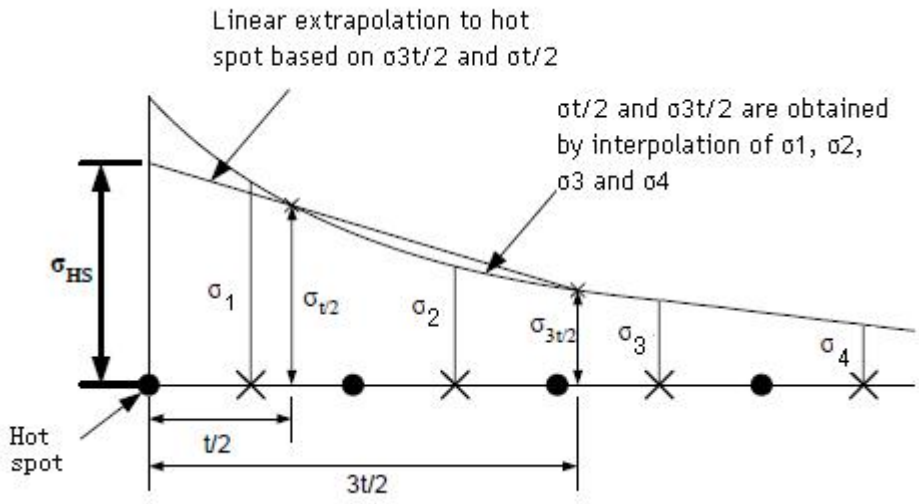

Figure 5.5.2(1) Hot spot stress of general weld type nodes

(2) Four interpolation points are selected on surface of stressed members in the vicinity of hot spots, and stress read out points are to be within 4 interpolation points. The stress of interpolation points is to be the average value of stresses at the element center points at left and right of A-A line, as shown in Figure 5.5.2(2). Stress σ at stress read out points located at distances t/2 and 3t/2 away from the weld toe is to be determined according to the stress at selected interpolation points by Lagrange's interpolation method and calculated according to following formula:

$$\sigma = C_1\sigma_1 + C_2\sigma_2 + C_3\sigma_3 + C_4\sigma_4 \qquad \text{N/mm}^2$$

where: σ_1 —stress at interpolation point 1, in N/mm^2;

σ_2 —stress at interpolation point 2, in N/mm^2;

σ_3 —stress at interpolation point 3, in N/mm^2;

σ_4 —stress at interpolation point 4, in N/mm^2;

C_1, C_2, C_3 and C_4 are to be calculated according to following formulae:

$$C_1 = \frac{(x-x_2)(x-x_3)(x-x_4)}{(x_1-x_2)(x_1-x_3)(x_1-x_4)}$$

$$C_2 = \frac{(x-x_1)(x-x_3)(x-x_4)}{(x_2-x_1)(x_2-x_3)(x_2-x_4)}$$

$$C_3 = \frac{(x-x_1)(x-x_2)(x-x_4)}{(x_3-x_1)(x_3-x_2)(x_3-x_4)}$$

$$C_4 = \frac{(x-x_1)(x-x_2)(x-x_3)}{(x_4-x_1)(x_4-x_2)(x_4-x_3)}$$

where: x—distance from stress read out point to weld toe, in mm;

x_1 —distance from interpolation point 1 to weld toe, in mm;

x_2 —distance from interpolation point 2 to weld toe, in mm;

x_3 —distance from interpolation point 3 to weld toe, in mm;

x_4 —distance from interpolation point 4 to weld toe, in mm.

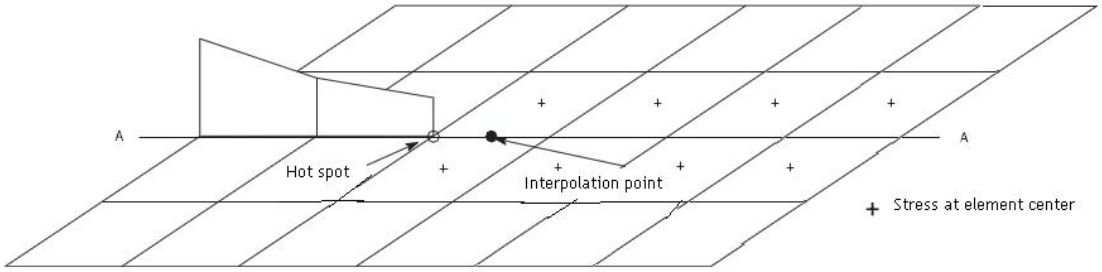

Figure 5.5.2(2) Method for obtaining stress at interpolation points

5.5.3 Hot spot stress calculation for cruciform weld type nodes

(1) For cruciform weld type nodes (such as weld type hopper knuckle, horizontal girder root, lower stool and inner bottom knuckle), as shown in Figure 5.5.3(1), for load case "*ij*" of loading condition "(*k*)", stress $\sigma_{ij(k)}$ at hot spot is to be the stress in way of element intersection line x_{shift} and obtained by linear interpolation of stress at adjacent interpolation points on the intersection line, as shown in Figure 5.5.3(2).

Stress read out position x_{shift} is to be calculated according to following formula:

$$x_{shift} = \frac{t}{2} + x_{wt} \qquad \text{mm}$$

where: t—thickness of plate at hot spot, in mm;

x_{wt} —length of weld toe, in mm, not greater than $t/2$.

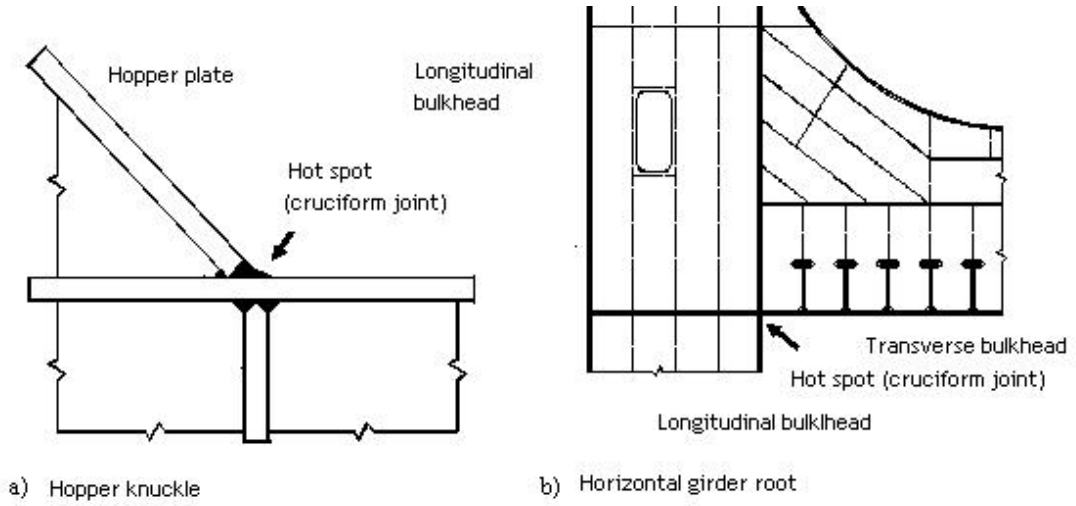

Figure 5.5.3(1) Cruciform weld type nodes

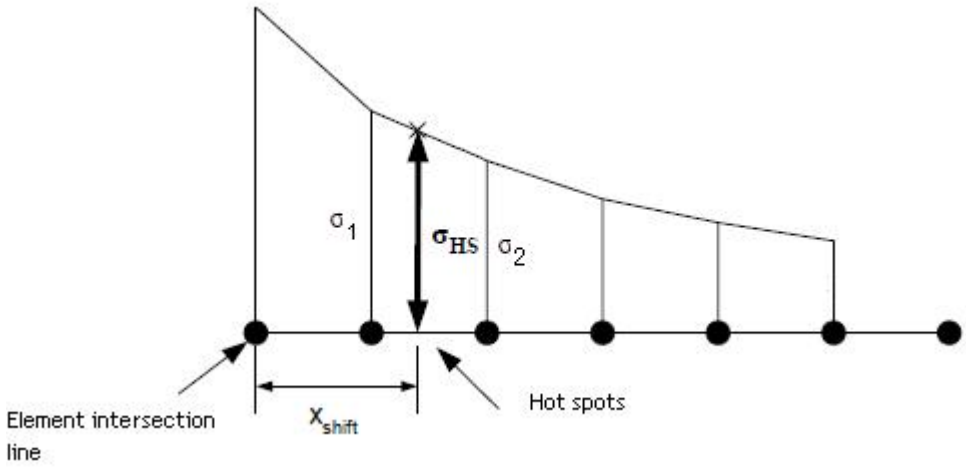

Figure 5.5.3(2) Stress interpolation value of cruciform weld type hot spots

(2) The stress of adjacent interpolation points is obtained by average element midpoint stress at left and right sides of A-A line. Element midpoint stress is to be calculated according to following formula:

$$\sigma_{ij(k)}(x) = (\sigma_{ij(k),membrane}(x) + 0.6 f_{ld} \sigma_{ij(k),bending}(x)) \times \beta \qquad (j = 1,2) \quad \text{N/mm}^2$$

where: $\sigma_{ij(k),bending}(x)$ —bending stress, in N/mm^2, to be calculated according to following formula:

$$\sigma_{ij(k),bending}(x) = \sigma_{ij(k),surface}(x) - \sigma_{ij(k),membrance}(x) \qquad (j = 1,2) \quad \text{N/mm}^2$$

$\sigma_{ij(k),surface}(x)$ —surface stress within 45° perpendicular to weld toe, in N/mm^2, including membrane stress and bending stress;

$\sigma_{ij(k),membrance}(x)$ —membrane stress, in N/mm^2;

f_{ld} —factor, to be determined according to following requirements:

f_{ld} =1 for plate subject to local lateral load;

f_{ld} =0 for plate not subject to local lateral load.

β —plate angle correction factor, to be calculated according to following formulae:

$$\beta = 1.07 - 0.15\frac{x_{wt}}{t} + 0.22\left(\frac{x_{wt}}{t}\right)^2 \quad \text{for} \quad \alpha = 135°$$

$$\beta = 1.09 - 0.16\frac{x_{wt}}{t} + 0.36\left(\frac{x_{wt}}{t}\right)^2 \quad \text{for} \quad \alpha = 120°$$

$$\beta = 1.09 + 0.036\frac{x_{wt}}{t} + 0.27\left(\frac{x_{wt}}{t}\right)^2 \quad \text{for} \quad \alpha = 90°$$

Plate angle correction factors for other angles are to be determined by linear interpolation.

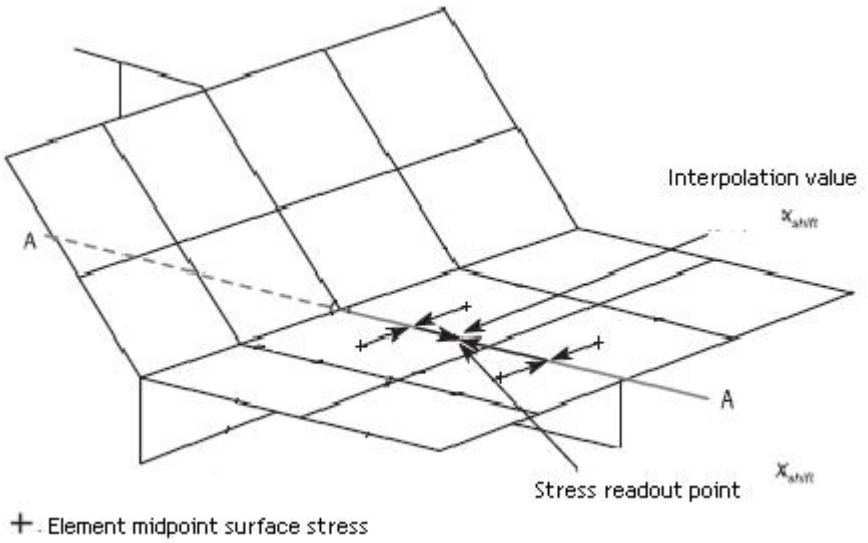

Figure 5.5.3(3) Determination of stress at interpolation points

(3) Hot spots located in way of the web with cruciform joint are to be checked according to the maximum principal surface stress at the intersection offset by the distance x_{shift} from the vertical and horizontal element intersection lines. The intersection line is taken at the mid thickness of the cruciform joint assuming a median alignment. The hot spot stress σ_{HS} , in N/mm^2, is to be obtained as:

$$\sigma_{HS} = \sigma_{shift}$$

where: σ_{shift}—Maximum principal surface stress, in N/mm^2, at the intersection offset by the distance x_{shift}.

The distance of offset from the hot spot stress readout position is obtained as:

$$x_{shift} = \frac{t_w}{2} + x_{wt}$$

where:

t_w ——plate thickness of the web, in mm;

x_{wt} ——extended fillet weld leg length , in mm, taken as:

$$x_{wt} = \min(l_{leg1}, l_{leg2})$$

l_{leg1}, l_{leg2} : leg length, in mm, of the vertical and horizontal weld lines shown in Figure 5.5.3(4).

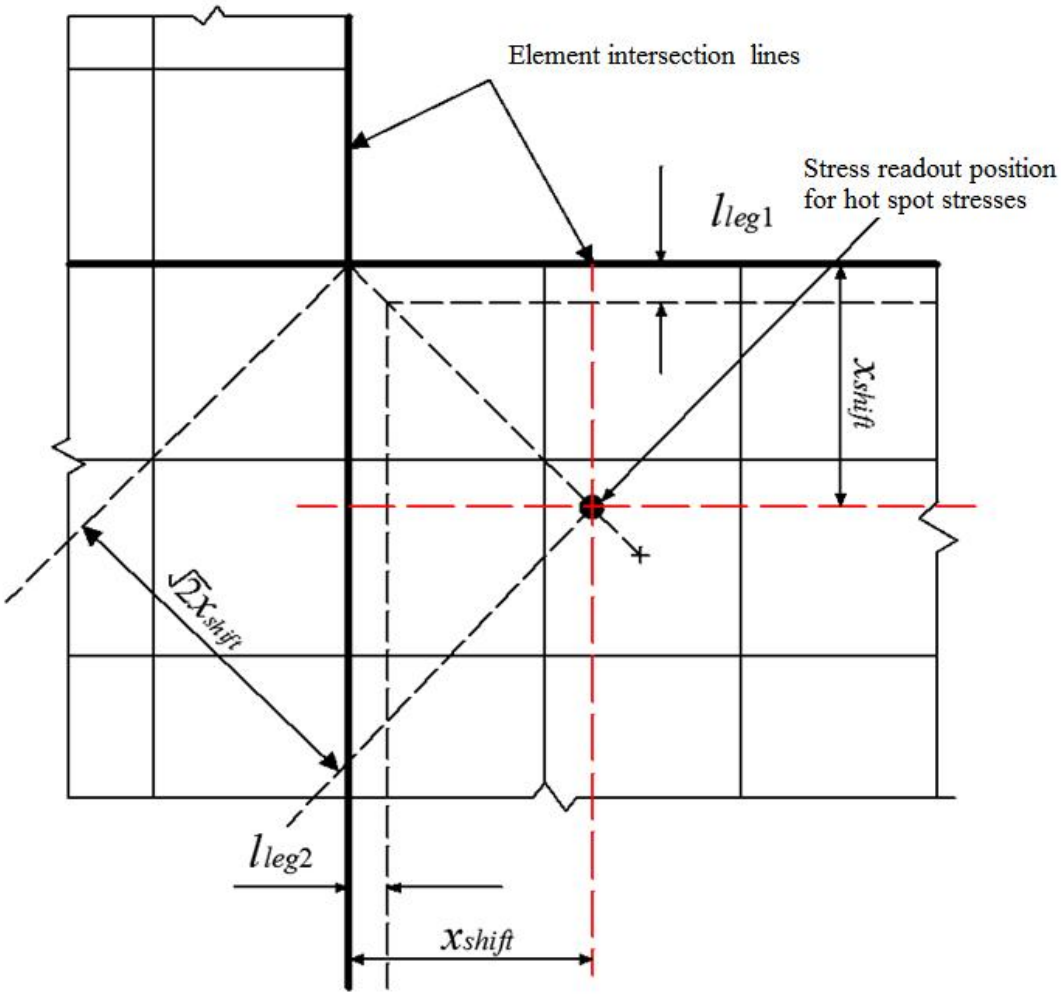

Figure 5.5.3(4) Hot spots in way of web and hot spot stress readout

5.5.4 For fatigue assessment of free edge of plate, a beam element is to be used to obtain the fatigue stress range. The stress range is to be based on axial and bending stress in the beam element. The beam element is to have the same depth as the connecting plate thickness while the in-plane width is negligible.

5.6 Requirements for finite elements of typical details

5.6.1 Hopper knuckle welded connection

(1) The modeling requirements in this subparagraph are applicable to the modeling of bilge hopper lower-knuckle and upper-knuckle welded connections.

(2) Where a separate local finite element model is used, the minimum extent of the local model is to be according to the following:

① Longitudinally, the model is to cover two web frame spaces (i.e. one web frame space extending either side of the transverse web frame of interest). Transverse web frames at the end of the local model need not be represented in the local model;

② Vertically, the model is to extend from the baseline to the lower stringer in the double side water ballast tank for tankers and double skin bulk carriers. For single skin bulk carriers, the model is to extend from the baseline to the top of the hopper ballast tank. Where a fatigue assessment is also carried out for the upper knuckle connection, the model is to be extended to four longitudinal spaces above the lower stringer in the double side ballast tank;

③ Transversely, the model is to extend from the ship side to 4 longitudinal spaces inboard of the double bottom side girder.

(3) Any scarfing brackets on the web frame adjoining the inner bottom plating, the first longitudinal stiffeners away from the knuckle hot spot as well as any carlings and brackets offset from the main frames are to be modeled explicitly using shell elements. Longitudinal stiffeners further away from the knuckle may be modeled by beam elements. The inner bottom plate 'overhang' outboard of the girder is to be modeled using shell elements up to the extent of the scarfing bracket. Away from the scarfing bracket in longitudinal direction, the inner bottom plate 'overhang' may be modeled using line elements of equivalent the area. Any perforations, such as cut-outs for cabling, pipes and access that are within one stiffener space from the knuckle point are to be modeled explicitly.

(4) Figures 5.6.1(1) to (3) show typical local finite element models of the hopper lower knuckle connection and close-up views of mesh zone.

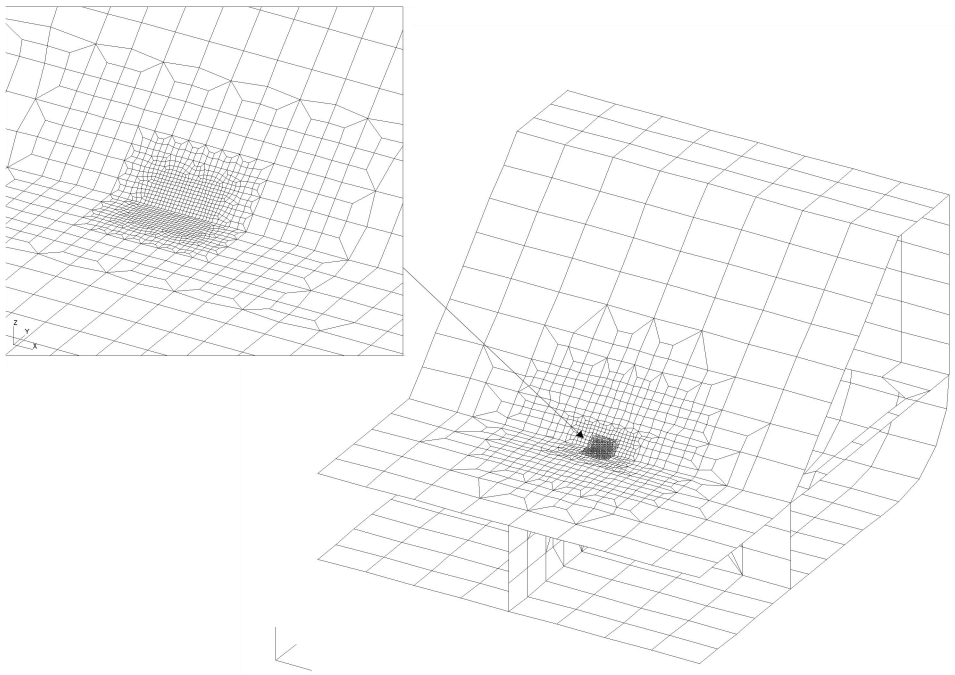

Figure 5.6.1(1) Finite element fine mesh model of hopper lower knuckle

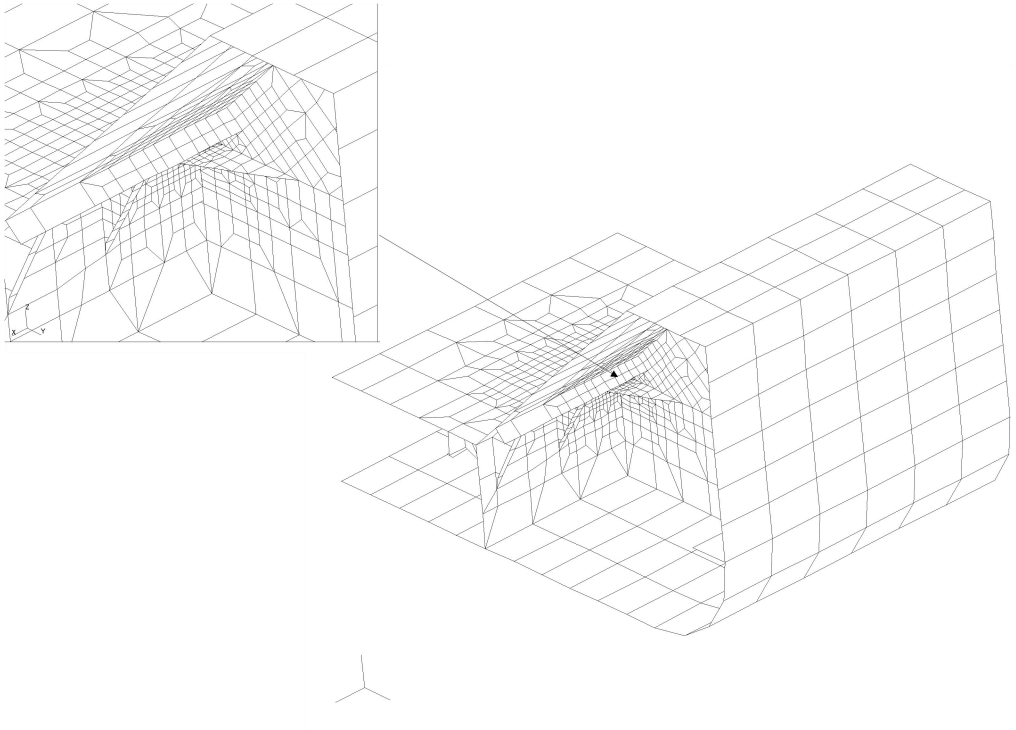

Figure 5.6.1(2) Finite element fine mesh model of hopper lower knuckle

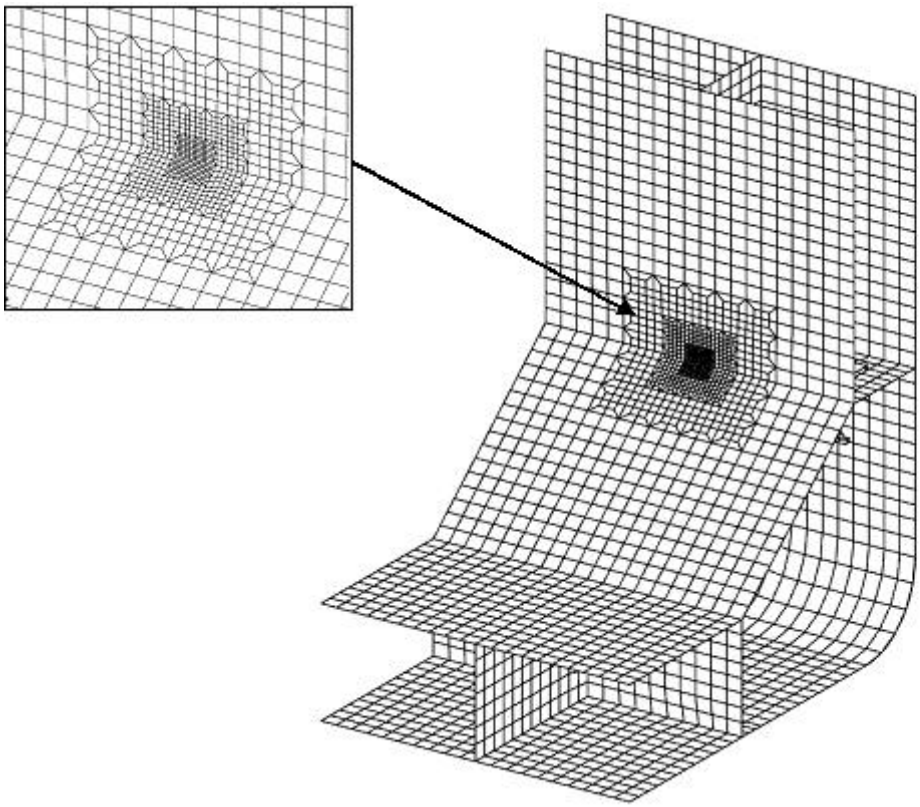

Figure 5.6.1(3) Finite element fine mesh model of hopper upper knuckle

5.6.2 Lower stool – inner bottom connection

(1) The modeling requirements in this subparagraph are applicable to the connection between lower stool and inner bottom knuckle.

(2) Where a separate local finite element model is used, the minimum extent of the local model is as follows:

① Vertically, from the bottom shell to a level at least 2 m above the inner bottom or up to the connection of the corrugation to the upper shelf plate of the lower stool, whichever is greater;

② The local model is to be extended transversely to the nearest diaphragm web in the lower stool on each side of the fine mesh zone (i.e. to the adjacent double bottom girder). The end diaphragms need not be modeled;

③ Longitudinally, the model is to cover one floor space aft of the aft lower stool – inner bottom connection and one floor space forward of the forward lower stool – inner bottom connection.

(3) Diaphragm webs, brackets inside the lower stool and stiffeners on the stool plates are to be modeled at their actual positions within the extent of the local model. Shell elements are to be used for modeling of diaphragms and brackets. The first vertical or horizontal stiffeners on the lower stool plate and the first longitudinal stiffeners on the inner bottom are to be represented by shell elements, other stiffeners may be represented by beam elements. Figure 5.6.2 shows a typical finite element model of the lower stool - inner bottom connection.

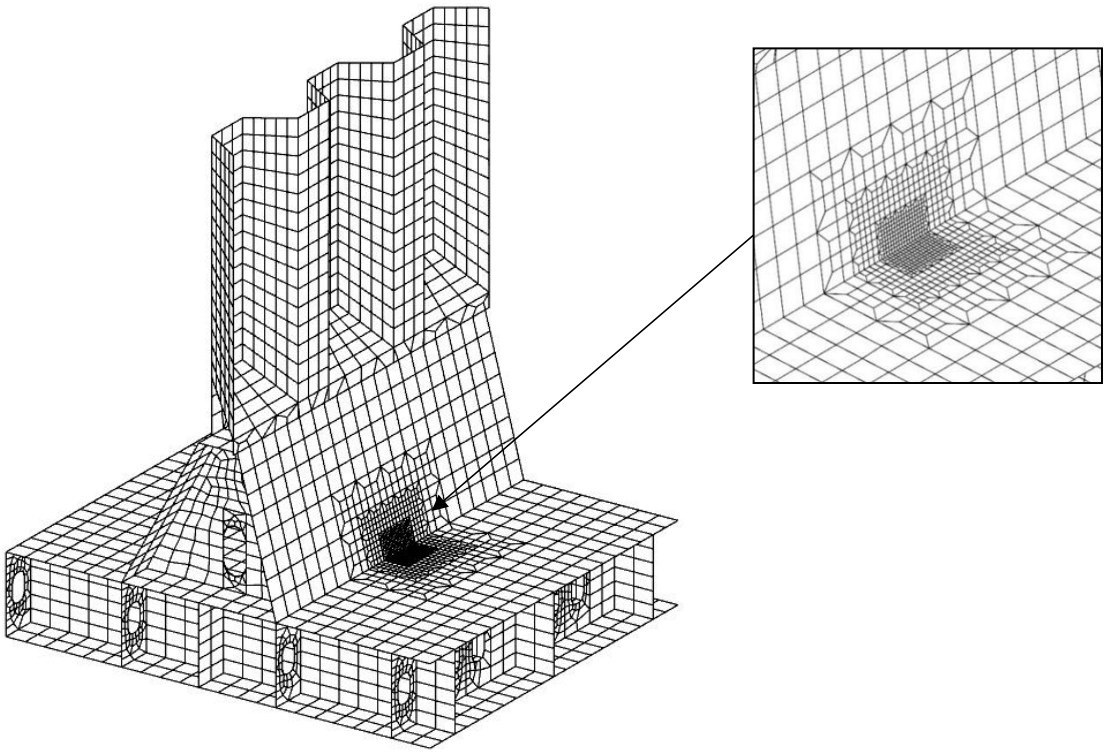

Figure 5.6.2 Connection between inner bottom and lower stool plate

5.6.3 Lower stool – corrugated bulkhead connection

(1) The modeling requirements in this subparagraph are applicable to the connection between lower stool knuckle and corrugated bulkhead.

(2) Where a separate local finite element model is used, the minimum extent of the local model is as follows:

① Vertically, from the bottom of the lower stool to a level at least 2 m above the upper shelf plate of the lower stool;

② The local model is to be extended transversely to the nearest diaphragm web in the lower stool on each side of the fine mesh zone (i.e. to the adjacent double bottom girder). The end diaphragms need not be modeled.

③ Longitudinally, the model is to cover one floor space aft of the aft lower stool – inner bottom connection and one floor space forward of the forward lower stool – inner bottom connection.

(3) Diaphragm webs, brackets inside the lower stool and stiffeners on the stool plates are to be modeled at their actual positions within the extent of the local model. Shell elements are to be used for modeling of diaphragms and bracket. The first vertical or horizontal stiffeners on the lower stool plate are to be represented by shell elements, other stiffeners may be represented by beam elements. Figure 5.6.3 shows a typical finite element model of the lower stool - corrugated bulkhead connection.

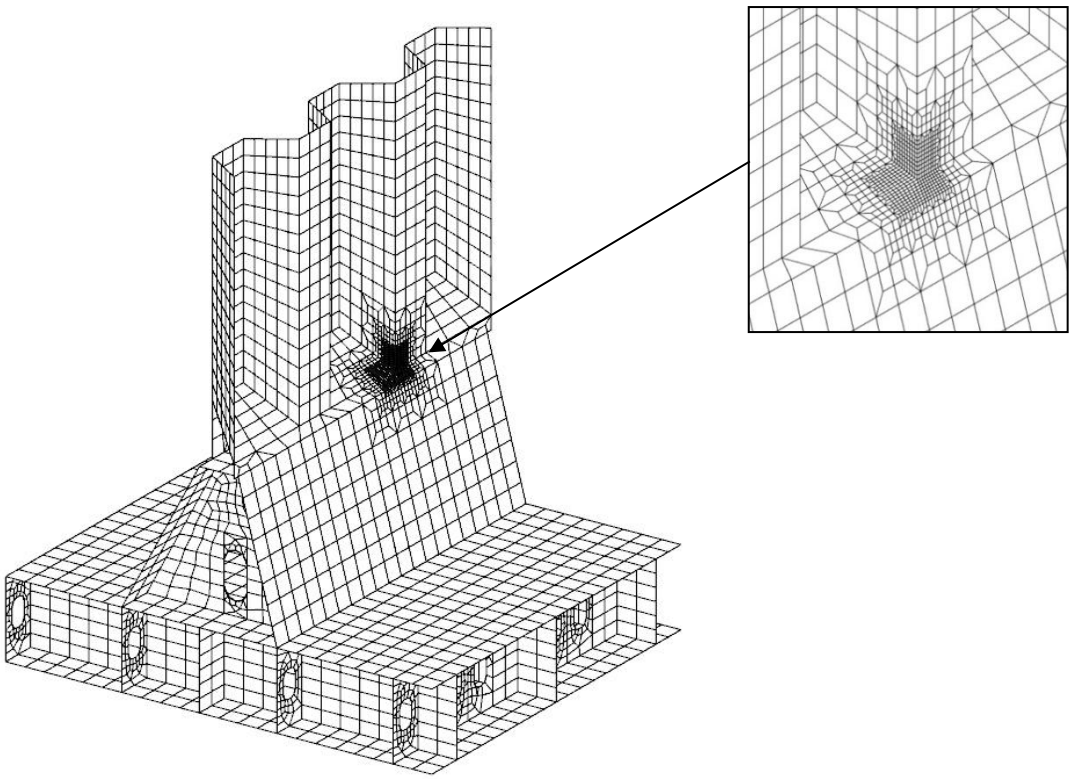

Figure 5.6.3 Connection between corrugated bulkhead and lower stool

5.6.4 Side frame bracket to hopper sloping plate connections

(1) The modeling requirements in this subparagraph are applicable to the side frame to hopper sloping plate bracket connections.

(2) Shell elements are to be used for modeling the side frame bracket, hopper tank sloping plate and adjacent stiffeners. Figure 5.6.4 shows a typical finite element model of the side frame bracket to hopper sloping plate connection.

(3) Where a separate local finite element model is used, the minimum extent of the local model is to be according to the following:

① Longitudinally, the model is to cover two web frame spaces (i.e. one web frame space extending either side of the bracket connection of interest). Transverse web frames at the end of the local model need not be represented in the local model;

② Vertically, the model is to extend from the baseline to the bottom of the topside tank sloping plate;

③ Transversely, the model is to extend from the ship side to the adjacent double bottom side girder.

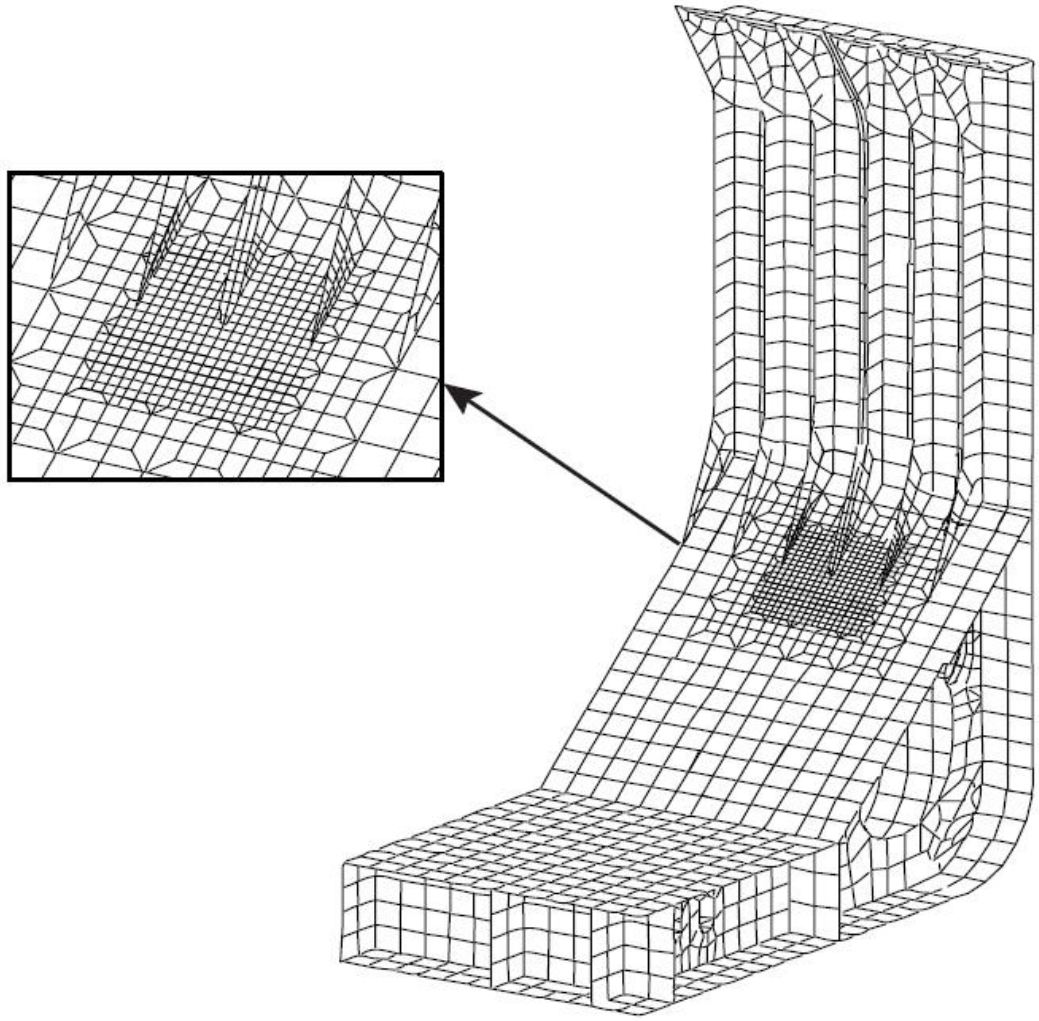

Figure 5.6.4 Side frame bracket to hopper sloping plate connections

5.6.5 Side frame bracket to the upper sloping / flat bottom wing tank connections

(1) The modeling requirements in this subparagraph are applicable to the side frame bracket to upper sloping/flat bottom wing tank connections.

(2) Shell elements are to be used for modeling the side frame bracket, upper sloping or flat bottom plate and adjacent stiffeners. Figure 5.6.5 shows a typical finite element model of the side frame toe end to hopper sloping plate connection.

(3) Where a separate local finite element model is used, the minimum extent of the local model is to be according to the following:

① Longitudinally, the model is to cover two web frame spaces (i.e. one web frame space extending either side of the bracket connection of interest). Transverse web frames at the end of the local model need not be represented in the local model;

② Vertically, the model is to extend from the deck level to the top of the hopper sloping plate;

③ Transversely, the model is to extend from the ship side to the hatch coaming corresponding to the upper sloping wing tank.

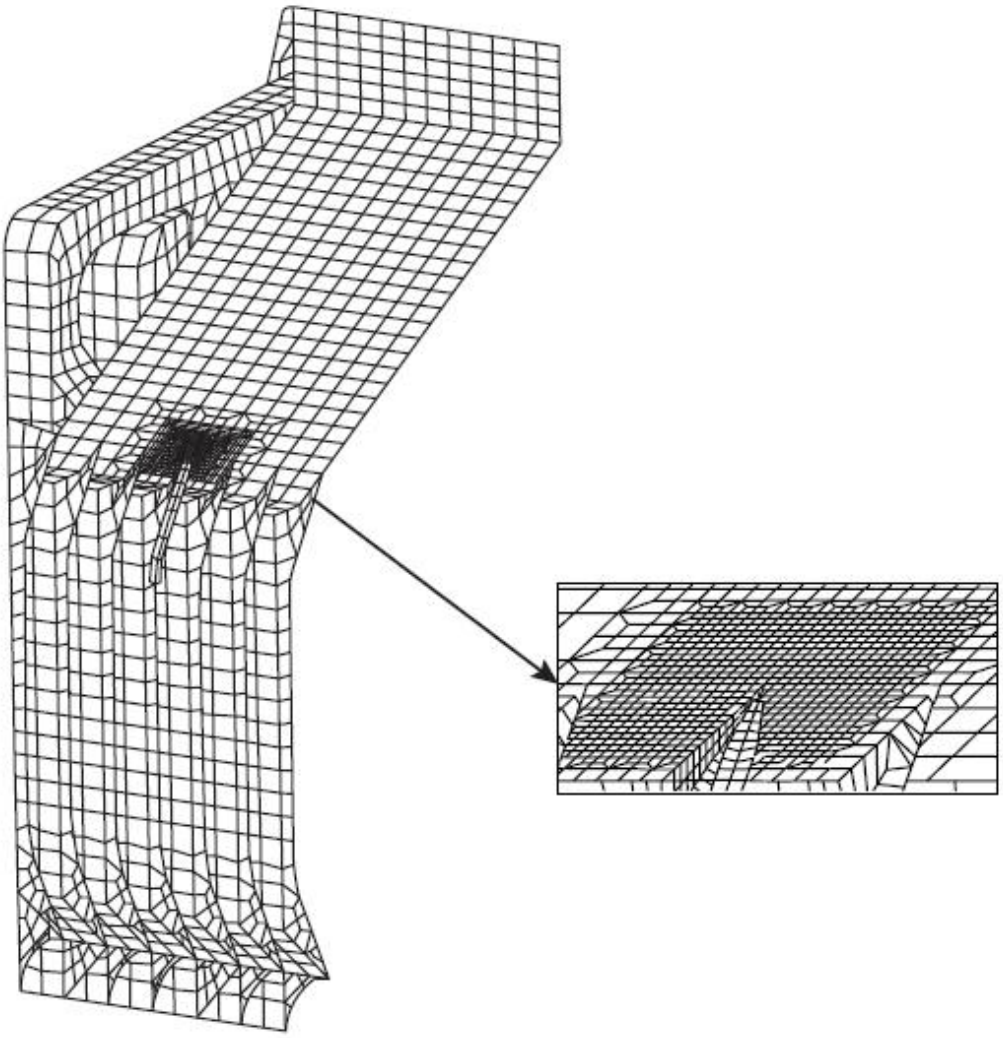

Figure 5.6.5 Side frame bracket to the upper sloping / flat bottom wing tank connections

5.6.6 Hatch coaming end bracket to the deck plating connection

(1) The modeling requirements in this subparagraph are applicable to hatch coaming end bracket to the deck plating connection.

(2) Where a separate local finite element model is used, the minimum extent of the local model is to be according to the following:

① Transversely, over the half-breadth of the ship;

② Longitudinally, from the midpoint of the compartment to the adjacent cargo hold up to and including the full width of the cross deck;

③ Vertically, from the top plate of coaming to the intersection of the topside tank sloping plate with the side or inner side shell.

(3) The primary supporting members and coaming stays are to be represented by shell finite elements. Figure 5.6.6 shows a typical FE model of the toe connection of a longitudinal hatch coaming end bracket to the deck plating.

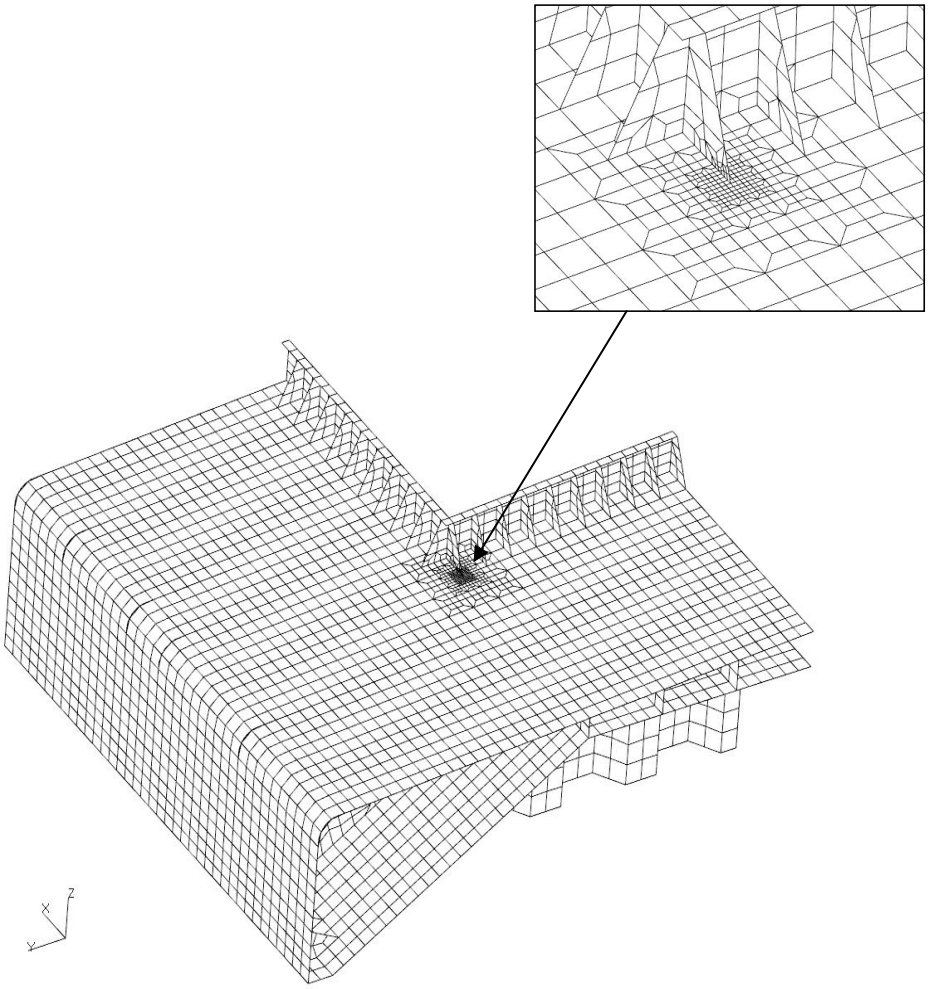

.

Figure 5.6.6 Hatch coaming end bracket to the deck plating connection

5.6.7 Connection of pillars to deck/deck transverse/deck girder in vehicle spaces on a vehicle carrier

(1) The modeling requirements in this subparagraph apply to connection of pillars to deck/deck transverse/deck girder in vehicle spaces.

(2) Vehicle deck, pillars, deck transverse and vehicle deck girder adjacent to the connections are to be accurately modeled using shell elements. Connection of vehicle deck pillars to deck/deck transverse/deck girder is shown in Figure 5.6.7.

(3) If an independent local finite element model is used, the minimum range of the local model is as follows:

① Transversely, the model is to cover full width.

② Longitudinally, the model is to extend one web beam spacing from fore and aft of the web beam respectively in the areas under investigation.

③ Vertically, the model is to extend one vehicle deck height from above and below the area under investigation respectively.

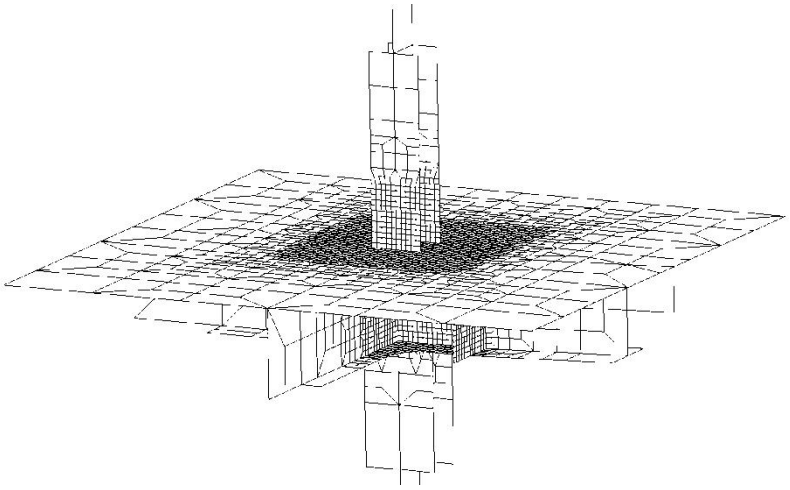

Figure 5.6.7 Fine mesh model of connection of pillars to deck/deck transverse/deck girder in vehicle spaces on a vehicle carrier

5.6.8 Opening of deck gas dome on a liquefied gas carrier

The opening area is to be meshed using elements with a sufficiently small size to capture the local stress on the edge. In general, a minimum of 15 elements in a 90 degree arc are to be used to describe the curvature of its opening. For an elliptical or parabolic opening, a minimum of 15 elements are to be used from the inboard radius end to a point on the edge located at half the distance of the major axis. A total of 20 elements are to be used at the elliptical edge of the opening. However, the element edge dimensions along the free edge of the radius need not be less than the thickness of the plating being represented and also should not be greater than 5 times the thickness of the plating being represented. If conditions permit, this level of fine meshes is to be maintained over the bracket plating of hatch coaming and is to extend into deck transverse, main deck plating and opening coaming. Mesh transitions should not be arranged close to bracket toes.

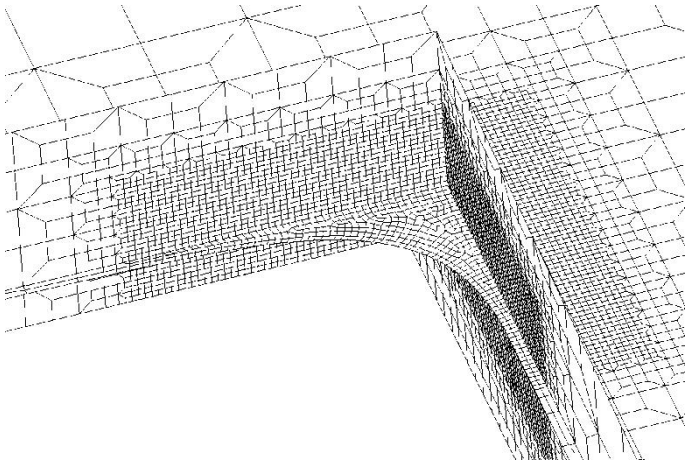

Figure 5.6.8 Fine mesh elements of opening of deck gas dome on a liquefied gas carrier

CHAPTER 6 FATIGUE STRENGTH OF PUMP TOWER

6.1 General provisions

6.1.1 This Chapter is applicable to fatigue strength assessment of pump tower structures of membrane tank liquefied gas carriers.

6.1.2 Where not covered in this Chapter, the requirements of Chapter 20, PART TWO of CCS Rules for Classification of Sea-going Steel Ships are to be complied with.

6.1.3 For fatigue strength assessment of pump tower structure, the No.2 cargo tank close to the bow is to be taken as the target tank for sloshing load calculation.

6.1.4 Fatigue strength assessment process of pump tower structure is as shown in Figure 6.1.4 of this Chapter.

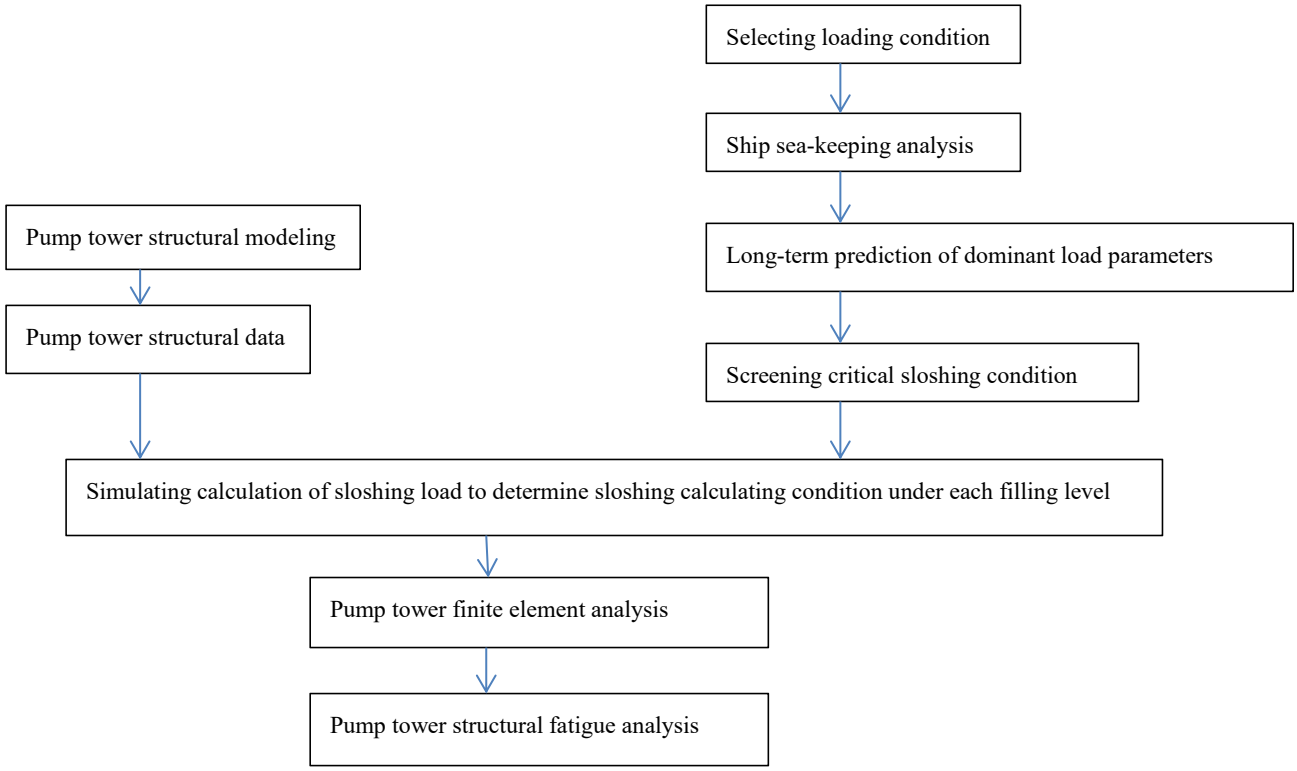

Figure 6.1.4 Pump tower fatigue analysis process

6.2 Loading conditions and filling level

6.2.1 Two loading conditions set in Table 6.2.1 of this Chapter are to be selected as the calculation conditions used for ship sea-keeping analysis. For full load condition, filling level not less than 50%*h* in 6.2.2 of this Chapter is to be used. For ballast condition, filling level less than 50%*h* in 6.2.2 of this Chapter is to be used.

Loading conditions for sea-keeping analysis Table 6.2.1

No.	Loading condition	Draught
1	Full load condition	Summer load line draught
2	Ballast condition	Ballast draught at arrival

6.2.2 In addition to all filling levels in the loading manual, 5%*h*, 10%*h*, 70%*h* and 95%*h* are to be selected as standard filling levels under consideration. Where additional filling levels are

required, detailed data of filling level and service time proportion under each filling level are to be provided by the designer.

6.2.3 If service time proportion under each filling level is not provided by the designer, even distribution may be assumed.

6.3 Ship sea-keeping analysis

6.3.1 Ship sea-keeping analysis based on equivalent design wave approach is mainly used for:

(1) obtaining response amplitude operators (RAO) of dominant load parameters to determine critical sloshing condition;

(2) obtaining Weibull shape parameter of dominant load parameters to determine long-term distribution of fatigue stress;

(3) determining long-term prediction value of dominant load parameters for calculating sloshing load.

6.3.2 Equivalent design wave approach

(1) For unrestricted service, the long-term distribution of wave loads is calculated by combining the short-term predictions into the long-term predictions based on the existing information on wave statistics, in which the extreme value of certain probability level of exceedance is taken;

(2) A method of short-term extreme value prediction is used for the specific service. At a given probability level, the sea condition corresponding to the highest wave height is to be obtained, and the short-term extreme values are calculated based on this sea condition;

(3) For fatigue analysis, the probability level of wave long-term extreme prediction value is 10^{-4}.

6.3.3 Dominant load parameters

(1) For transverse motion, roll motion (i.e. roll angle) and transverse acceleration are taken;

(2) For longitudinal motion, pitch motion (i.e. pitch angle) and longitudinal acceleration are taken.

6.3.4 Environmental data

(1) For unrestricted service, the North Atlantic wave data used are taken from the Wave Scatter Diagram of North Atlantic in IACS Rec.No34, and two-parameter Bretschneider spectrum function is recommended;

(2) For specific service, a specific wave scatter diagram for this area is generally used. A JONSWAP function is used for the wave spectrum.

6.4 Sloshing conditions

6.4.1 General provisions

Sloshing conditions are based on different wave heading angle and wave encounter frequency. Each filling level includes a set of critical sloshing conditions, and the most critical sloshing condition under this filling level can be screened.

6.4.2 Determination of critical sloshing condition

(1) The following three principles are to be complied with in determining the critical sloshing condition:

① RAO is in the vicinity of maximum value;

② the encounter period is in proximity to the sloshing motion period;

③ the wave heading angle is within the range of maximum effects.

(2) Based on the above principles, conditions for determining a critical sloshing condition are indicated in Table 6.4.2 of this Chapter.

Conditions for determining a critical sloshing condition Table 6.4.2

Motion	Formula for the conditions	Remarks
Transverse motion	$\left\|T_y - T_e\right\| < 0.3T_y$	T_y and T_e are natural period of tank transverse motion and wave encounter period respectively
	$\mathrm{RAO}(\beta,\omega) > 0.7\max\left[\mathrm{RAO}(\beta,\omega)\right]$	RAO is corresponding to the dominant load parameter
	$60^0 \le \beta \le 90^0$	Taking into account beam sea
Longitudinal motion	$\left\|T_x - T_e\right\| < 0.3T_x$	T_x and T_e are natural period of tank longitudinal motion and wave encounter period respectively
	$\mathrm{RAO}(\beta,\omega) > 0.7\max\left[\mathrm{RAO}(\beta,\omega)\right]$	RAO is corresponding to the dominant load parameter
	$0^0 \le \beta \le 30^0$	Taking into account head sea

6.4.3 Calculating sloshing condition

(1) According to sloshing motion period under each filling level, most critical sloshing condition under each filling level is obtained at maximum pump tower force in positive direction and reverse direction respectively;

(2) Calculation condition for pump tower fatigue analysis is to be based on most critical sloshing condition under each filling level.

6.5 Finite element analysis of pump tower structure

6.5.1 Structural modeling

Finite element structural model and boundary condition of pump tower structure are to comply with relevant requirements of 5.5, Appendix 2, Chapter 20, PART TWO of CCS Rules for Classification of Sea-going Steel Ships.

6.5.2 Fatigue load

(1) Sloshing load

The liquid velocity and acceleration along the centerline of the pump tower can be obtained by means of the direct calculation of sloshing motion. The sloshing-induced force on the pump tower, i.e. Morison force $\vec{F}_M$, is calculated by the following formula:

$$\vec{F}_M = \frac{1}{2}\rho C_d \vec{U}(z)\left|\vec{U}(z)\right| D + \frac{\pi}{4}\rho C_m \vec{a}(z) D^2 \qquad \text{N/m}$$

where: ρ—fluid density, in kg/m^3;

$U(z)$—liquid velocity in the pump tower pipe centerline normal to the member, in m/s;

$a(z)$—liquid acceleration in the pump tower pipe centerline normal to the member, in m/s^2;

D—diameter of transverse section of pump tower, in m;

C_d—drag coefficient of Morison, normally taken as 1.2;

C_m—inertia coefficient of Morison, normally taken as 2.0.

The change of Morison force along the length and vertical direction of the member is to be taken into account in loading the FE model. The combined Morison force $\vec{F}_l$ acting on a structural member of the length of l is:

$$\vec{F}_l = \int_0^l \left[\frac{1}{2} \rho C_d \vec{U}(z) \left| \vec{U}(z) \right| D + \frac{\pi}{4} \rho C_m \vec{a}(z) D^2 \right] dl \quad \text{N}$$

(2) Inertial forces

The impact of ship motion and gravity are to be considered in the FE model. Inertia accelerations of pump tower are given by:

$$\begin{cases} a_x = \ddot{\xi}_1 - (y_C - y_G)\ddot{\theta}_3 + (z_C - z_G)\ddot{\theta}_2 - g\theta_2 \\ a_y = \ddot{\xi}_2 + (x_C - x_G)\ddot{\theta}_3 - (z_C - z_G)\ddot{\theta}_1 + g\theta_1 \\ a_z = \ddot{\xi}_3 - (x_C - x_G)\ddot{\theta}_2 + (y_C - y_G)\ddot{\theta}_1 - g \end{cases}$$

where: a_x, a_y and a_z——inertia accelerations of the pump tower along X, Y and Z axes, in m/s^2;

x_C, y_C and z_C——three dimensional coordinates of the point considered, in m;

x_G, y_G and z_G——three dimensional coordinates of the ship's center of gravity, in m.

6.5.3 Finite element analysis

Each sloshing calculating condition corresponds to two sets of positive and reverse direction sloshing loads. Two sets of loads are loaded on pump tower structure finite element model respectively, and inertia loads at the same direction are superimposed at the same time. Nominal stress on each pole section of pump tower tubular joints is obtained by static analysis calculation.

6.6 Fatigue analysis

6.6.1 The design fatigue life of pump tower of membrane tank LNG carrier is not to be less than 20 years.

6.6.2 Fatigue strength of each tubular joint in pump tower structure is to be checked. Typical tubular joints include thick pipe and thin pipe. The thick pipe is the chord while the thin one is the brace (including horizontal brace and sloping brace).

6.6.3 Hot spot stress of tubular joints

Hot spot stress of tubular joints can be calculated according to stress concentration factor after nominal stress is obtained. For each checked section, 8 positions are selected for hot spot stress calculation, as shown in Figure 6.6.3 of this Chapter.

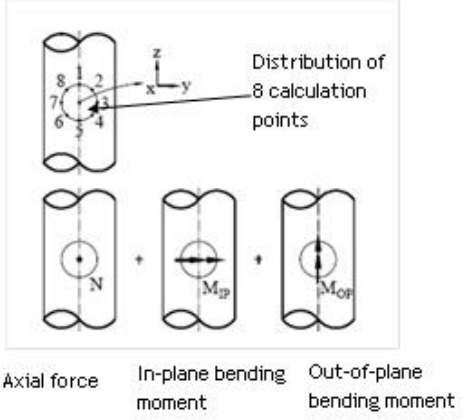

Figure 6.6.3 Distribution of hot spot stress calculation points

The hot spot stress combination of above 8 calculation points can be obtained by following formulae:

$$\sigma_1 = SCF_A\sigma_x - SCF_I\sigma_{my}$$

$$\sigma_2 = SCF_A\sigma_x - \frac{1}{2}\sqrt{2}SCF_I\sigma_{my} + \frac{1}{2}\sqrt{2}SCF_O\sigma_{mz}$$

$$\sigma_3 = SCF_A\sigma_x + SCF_O\sigma_{mz}$$

$$\sigma_4 = SCF_A\sigma_x + \frac{1}{2}\sqrt{2}SCF_I\sigma_{my} + \frac{1}{2}\sqrt{2}SCF_O\sigma_{mz}$$

$$\sigma_5 = SCF_A\sigma_x + SCF_I\sigma_{my}$$

$$\sigma_6 = SCF_A\sigma_x + \frac{1}{2}\sqrt{2}SCF_I\sigma_{my} - \frac{1}{2}\sqrt{2}SCF_O\sigma_{mz}$$

$$\sigma_7 = SCF_A\sigma_x - SCF_O\sigma_{mz}$$

$$\sigma_8 = SCF_A\sigma_x - \frac{1}{2}\sqrt{2}SCF_I\sigma_{my} - \frac{1}{2}\sqrt{2}SCF_O\sigma_{mz}$$

where: SCF_A, SCF_I and SCF_O—stress concentration factor of tubular joints, to be taken according to Table 6.6.5 of this Chapter;

σ_x, σ_{my} and σ_{mz} —nominal axial stress, nominal in-plane bending stress and nominal out-of-plane bending stress on each circular pipe element respectively, in N/mm^2.

6.6.4 Design stress range

(1) Hot spot stress range of tubular joints is to be calculated according to following formula:

$$S_{h,i(k)} = \left|\sigma_{i(k)} - \sigma'_{i(k)}\right| \qquad \text{N/mm}^2$$

where: $\sigma_{i(k)}$ —hot spot stress of ith point under positive direction sloshing load and sloshing

condition "(k)" considered, in N/mm^2;

$\sigma'_{i(k)}$ —hot spot stress of ith point under reverse direction sloshing load and sloshing condition "(k)"considered, in N/mm^2.

(2) Design stress range $S_{D(k)}$ under sloshing calculating condition "(k)" is to be calculated according to following formula:

$$S_{D(k)} = \max(S_{h,i(k)}) \qquad \text{N/mm}^2$$

6.6.5 Tubular joint stress concentration factor

Tubular joint stress concentration factor *SCF* is calculated according to parameter formula in Table 6.6.5 of this Chapter.

Tubular joint stress concentration factor formula **Table 6.6.5**

Type of tubular joint		α	Axial load SCF_A	In-plane bending moment SCF_I	Out-of-plane bending moment SCF_O
Chord SCF_{chord}	K	1.0	αA	$2/3A$	$3/2A$
	T&Y	1.7			
Brace SCF_{brace}			$1.0+0.375(1+\sqrt{\eta/\mu}\cdot \text{SCF}_{\text{chord}}) \geq 1.8$		

where: $A = 1.8\sqrt{\gamma}\eta\sin\theta$.

6.6.6 Fatigue damage of pump tower tubular joints

(1) The accumulative damage of pump tower tubular joints under sloshing calculating condition "(k)" is to be calculated according to following formula:

$$D_k = \frac{N_D \alpha_k}{K} \frac{{S_{D(k)}}^m}{(\ln N_L)^{m/\xi_k}} \mu_k \Gamma\left(1+\frac{m}{\xi_k}\right)$$

where: α_k —time distribution factor under loading condition "(k)", see 6.2.2 and 6.2.3 of this Chapter;

$S_{D(k)}$ —design stress range, see 6.6.4(2);

N_L —circulation cycle for load spectrum in restoring period, to be taken as 10^4;

K—factor for S-N curve, to be taken as $10^{12.146}$;

ξ_k —Weibull shape parameter for sloshing calculating condition "(k)", to be calculated according to 6.3 of this Chapter:

$$\mu_k = 1.0 - \frac{\gamma\left(1+\frac{m}{\xi_k}, \nu_k\right) - \nu_k^{-\frac{\nabla m}{\xi_k}} \gamma\left(1+\frac{m+\nabla m}{\xi_k}, \nu_k\right)}{\Gamma\left(1+\frac{m}{\xi_k}\right)}$$

$$\nu_k = \left(\frac{S_q}{S_{D(k)}} \right)^{\xi_k} \ln N_L$$

S_q —stress amplitude values at intersection point of two-slope S-N curves, $S_q = 52.63$ MPa，if plate thickness is more than 25mm, S_q is to be corrected:

$$S_q = 52.63 \Big/ \left(\frac{t}{25} \right)^n \quad \text{MPa}$$

n—correction factor，when $SCF \le 10$, $n = 0.25$; when $SCF > 10$， $n = 0.3$;

For other symbols, see 3.5.1, Chapter 3 of the Guidelines.

(2) Total accumulative damage of pump tower tubular joints is to be calculated according to following formula:

$$D = \sum D_k$$

where: D_k—accumulative damage of pump tower tubular joints under each sloshing condition considered, see (1).

6.6.7 Fatigue life calculation

Fatigue life of pump tower tubular joints is to be calculated according to following formula:

$$T_F = \frac{20}{D}$$

where: D—total accumulative damage of pump tower tubular joints, see 6.6.6(2) of this Chapter.

APPENDIX HULL STRUCTURAL DETAILS OF BULK CARRIERS, OIL TANKERS AND CONTAINER SHIPS

<table>
<tr><td colspan="2">Structural details of bulk carriers</td><td>Table 1</td></tr>
<tr><td colspan="3">Area: Double bottom
Critical location: Floor vertical flat bar stiffener connection to inner bottom and bottom longitudinals</td></tr>
<tr><td colspan="2">Critical areas</td><td>Structural details</td></tr>
<tr><td colspan="2">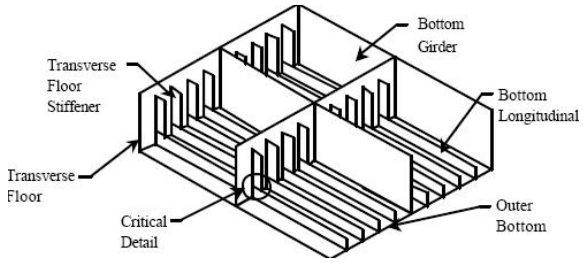
</td><td rowspan="2">(A) Soft heel
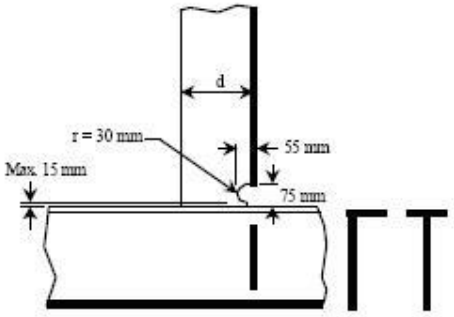

(B) Soft toe and soft heel
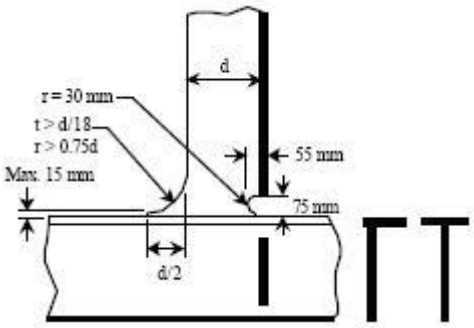

(C) Soft toe and soft backing bracket
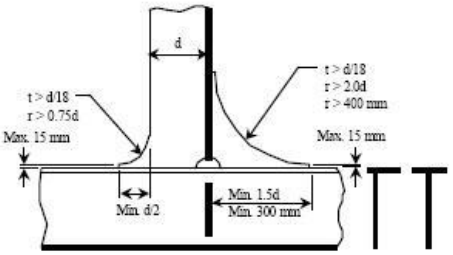
</td></tr>
<tr><td colspan="2">Critical locations</td></tr>
<tr><td colspan="2">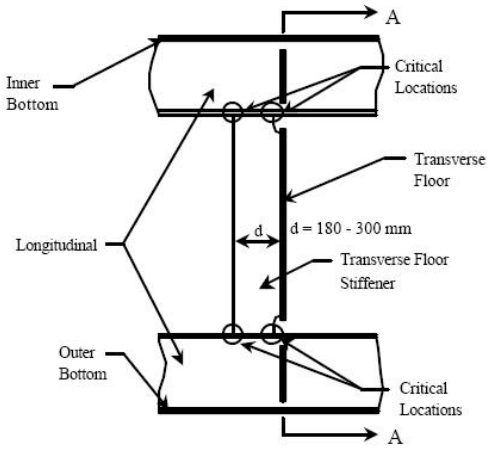

Section A-A
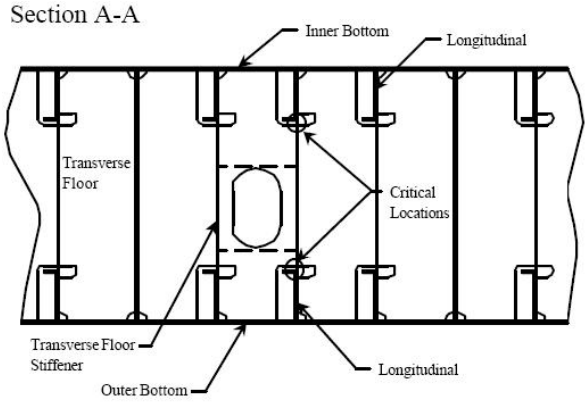
</td></tr>
<tr><td rowspan="4">Structural details</td><td>Applicable structures</td><td>Explanations</td></tr>
<tr><td>Interconnected double bottom and topside tanks and asymmetrical longitudinals</td><td>All longitudinals are to be fitted with (C) soft toe and soft backing bracket.</td></tr>
<tr><td>Interconnected double bottom and topside tanks and symmetrical longitudinals</td><td>All longitudinals are to be fitted with (B) soft toe and soft heel.</td></tr>
<tr><td>Non-interconnected double bottom and topside tanks and asymmetrical</td><td>All longitudinals are to be fitted with (B) soft toe and soft heel.</td></tr>
</table>

	longitudinals	
	Non-interconnected double bottom and topside tanks and symmetrical longitudinals	All longitudinals are to be fitted with (A) soft heel.
Building tolerances	Ensure good alignment between longitudinal stiffener web and floor stiffener and backing bracket, if fitted. See relevant requirements in Section 11, PART TEN of Rules for Classification of Sea-going Steel Ships.	
Welding requirements	Ensure start and stop of welding is as far away as practicable from the stiffener/backing bracket heel and toe. A wraparound weld, with smooth transition and free of weld defects liable to cause stress concentration, i.e. undercuts, notches etc., around the heel and toe connections of the stiffener and backing bracket connection to longitudinal. See Section 4, Chapter 1, PART TWO of Rules for Classification of Sea-going Steel Ships for other requirements.	

<table>
<tr><td>Structural details of bulk carriers</td><td colspan="2">Table 2</td></tr>
<tr><td colspan="3">Area: Hopper tank
Critical location: Welded knuckle connection of hopper tank sloping plating to inner bottom plating</td></tr>
<tr><td>Critical area</td><td colspan="2">Structural details</td></tr>
<tr><td>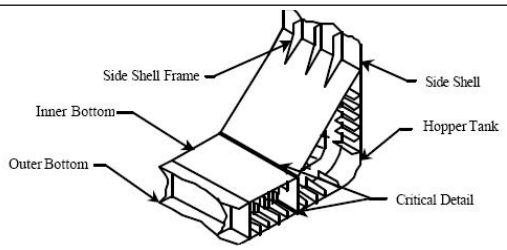
</td><td colspan="2" rowspan="2">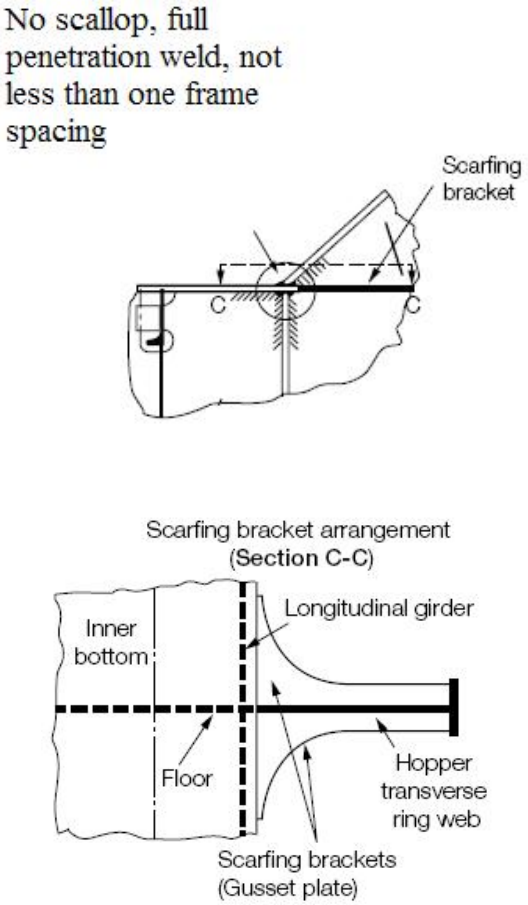
</td></tr>
<tr><td>Critical location</td></tr>
<tr><td>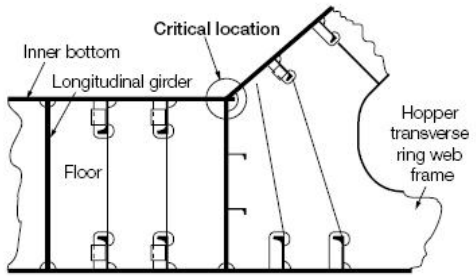
</td></tr>
<tr><td rowspan="2">Structural details</td><td>Applicable structures</td><td>Explanations</td></tr>
<tr><td>Ballast holds</td><td>Deep penetration weld: no scallops or close scallops with collars; scarfing bracket; weld connection between hopper, tanktop and girder.
Full penetration weld: weld connection between floor/hopper web and inner bottom/hopper plate/girder.</td></tr>
</table>

		Intermediate bracket: intermediate bracket is fitted if floor spacing is greater than 2.5 m.
	Dry holds	Deep penetration weld: close scallops or scarfing bracket; weld connection between hopper, tanktop and girder. Full penetration weld: weld connection between floor/hopper web and inner bottom/hopper plate/girder.
	Floor spacing is greater than 3.0 m	Hot spot stress fatigue assessment is to be carried out.
Building tolerances	Ensure good alignment between floor and hopper transverse ring web and between sloping plating and hopper side girder. Maximum misalignment is to be not greater than (t/3) where t is the thinner of the webs to be aligned. Relevant requirements are specified in Section 11, PART TEN of Rules for Classification of Sea-going Steel Ships.	
Welding requirements	The weld sequence is to be such as to avoid lamellar tearing. Smooth transition from welds completed on sides of ballast holds to the inner bottom plating is to be achieved. See Section 4, Chapter 1, PART TWO of Rules for Classification of Sea-going Steel Ships for other requirements.	

Structural details of bulk carriers	Table 3

Area: Hopper tank

Critical location: Transverse ring web, flat bar stiffener connection to longitudinal on hopper sloping plate, bottom shell and side shell plating

Critical areas	Structural details

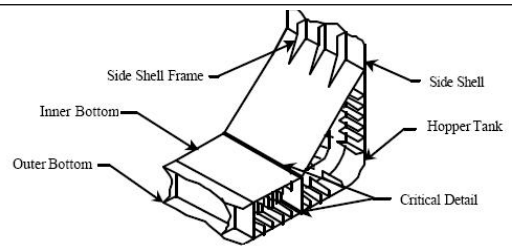

Critical locations

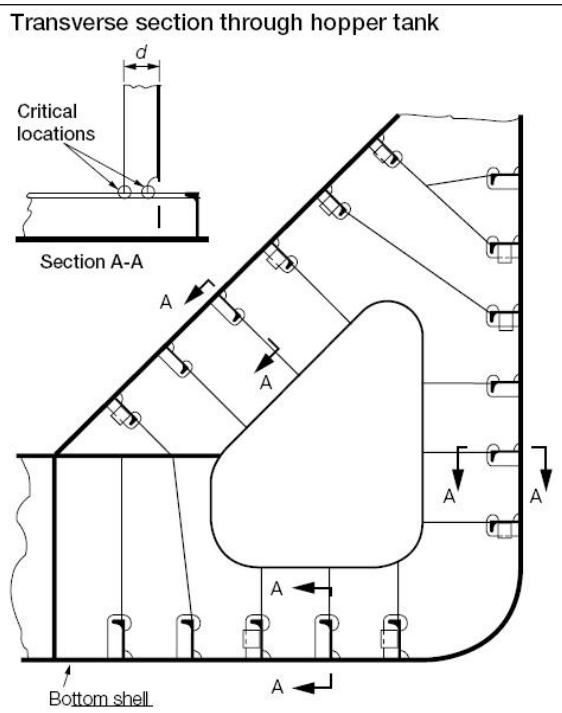

(A) Soft heel

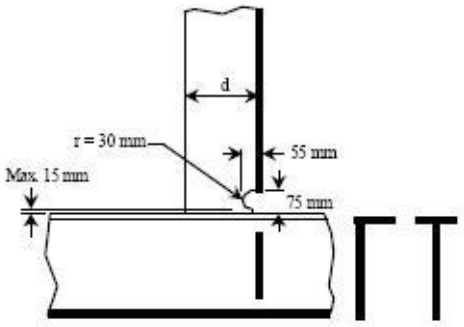

(B) Soft toe and soft heel

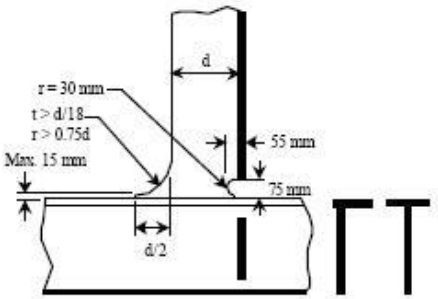

(C) Soft toe and soft backing bracket

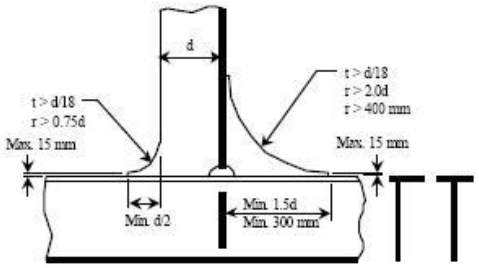

	Applicable structures	Explanations
Structural details	Interconnected double bottom and topside tanks and asymmetrical longitudinals	All longitudinals are to be fitted with (C) soft toe and soft backing bracket.
	Interconnected double bottom and topside tanks and symmetrical longitudinals	All longitudinals are to be fitted with (B) soft toe and soft heel.
	Non-interconnected double bottom and topside tanks and asymmetrical longitudinals	All longitudinals are to be fitted with (B) soft toe and soft heel.
	Non-interconnected double bottom and	All longitudinals are to be fitted with (A) soft heel.

	topside tanks and symmetrical longitudinals	
Building tolerances	Ensure good alignment between longitudinal stiffener web and floor stiffener and backing bracket, if fitted. See relevant requirements in Section 11, PART TEN of Rules for Classification of Sea-going Steel Ships.	
Welding requirements	Ensure start and stop of welding is as far away as practicable from the stiffener/backing bracket heel and toe. A wraparound weld, with smooth transition and free of weld defects liable to cause stress concentration, i.e. undercuts, notches etc., around the heel and toe connections of the stiffener and backing bracket connection to longitudinal. See Section 4, Chapter 1, PART TWO of Rules for Classification of Sea-going Steel Ships for other requirements.	

<table>
<tr><td colspan="3">Structural details of bulk carriers</td><td>Table 4</td></tr>
<tr><td colspan="4">Area: Hopper tank
Critical location: Transverse ring web, tripping bracket connection to longitudinal on hopper sloping plate, bottom shell and side shell plating</td></tr>
<tr><td colspan="2">Critical areas</td><td colspan="2">Structural details</td></tr>
<tr><td colspan="2">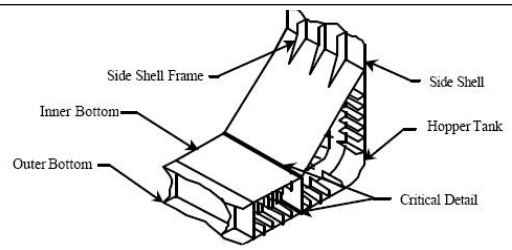
</td><td colspan="2" rowspan="2">(A) Soft heel
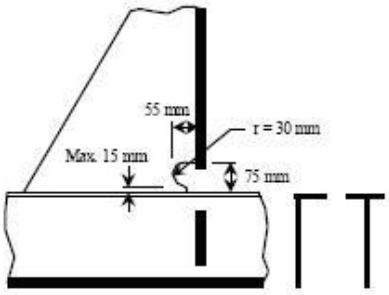

(B) Soft toe and soft heel
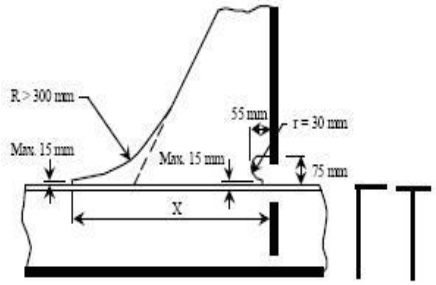

(C) Soft toe and soft backing bracket
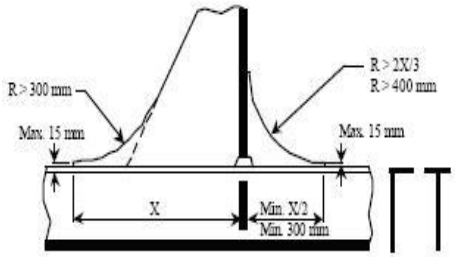
</td></tr>
<tr><td colspan="2">Critical locations</td></tr>
<tr><td colspan="2">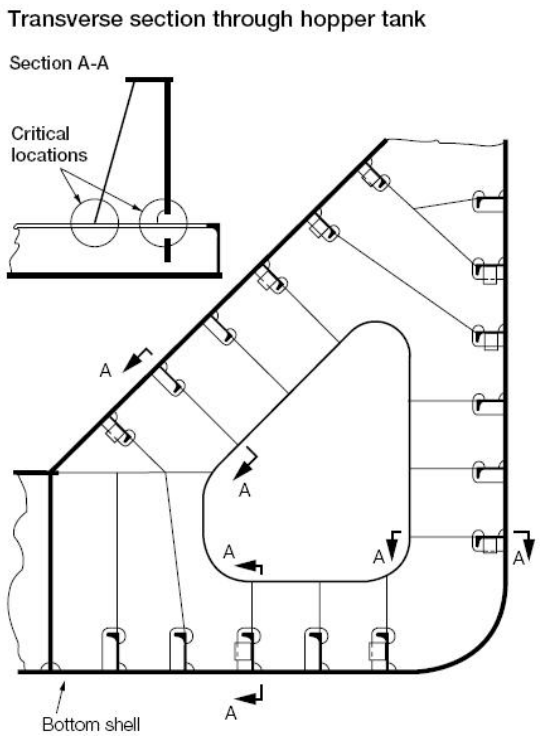
</td></tr>
<tr><td rowspan="5">Structural details</td><td>Applicable structures</td><td colspan="2">Explanations</td></tr>
<tr><td>Interconnected double bottom and topside tanks and asymmetrical longitudinals</td><td colspan="2">All longitudinals are to be fitted with (C) soft toe and soft backing bracket.</td></tr>
<tr><td>Interconnected double bottom and topside tanks and symmetrical longitudinals</td><td colspan="2">All longitudinals are to be fitted with (B) soft toe and soft heel.</td></tr>
<tr><td>Non-interconnected double bottom and topside tanks and asymmetrical longitudinals</td><td colspan="2">All longitudinals are to be fitted with (B) soft toe and soft heel.</td></tr>
<tr><td>Non-interconnected double bottom and</td><td colspan="2">All longitudinals are to be fitted with (A) soft heel.</td></tr>
</table>

	topside tanks and symmetrical longitudinals	
Building tolerances	Ensure good alignment between longitudinal stiffener web, transverse ring web tripping brackets and backing bracket, if fitted. See relevant requirements in Section 11, PART TEN of Rules for Classification of Sea-going Steel Ships.	
Welding requirements	Ensure start and stop of welding is as far away as practicable from the stiffener/backing bracket heel and toe. A wraparound weld, with smooth transition and free of weld defects liable to cause stress concentration, i.e. undercuts, notches etc., around the heel and toe connections of the tripping bracket and backing bracket connection to longitudinal. See Section 4, Chapter 1, PART TWO of Rules for Classification of Sea-going Steel Ships for other requirements.	

<table>
<tr><td colspan="3">Structural details of bulk carriers</td><td>Table 5</td></tr>
<tr><td colspan="4">Area: Hopper tank
Critical location: Upper intermediate brackets below hold side shell frame lower brackets</td></tr>
<tr><td colspan="2">Critical areas</td><td colspan="2">Structural details</td></tr>
<tr><td colspan="2">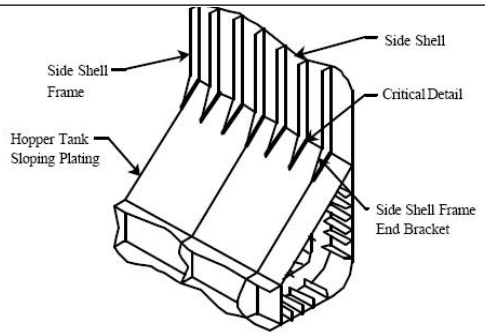
</td><td colspan="2" rowspan="2">(A) A longitudinal is fitted in way of the frame lower bracket toe.
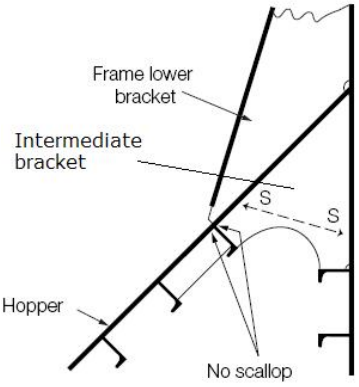

(B) A longitudinal is not fitted in way of the frame lower bracket toe.
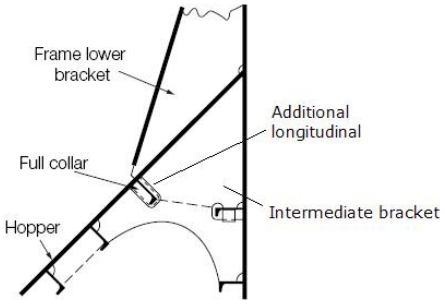
</td></tr>
<tr><td colspan="2">Critical locations</td></tr>
<tr><td colspan="2">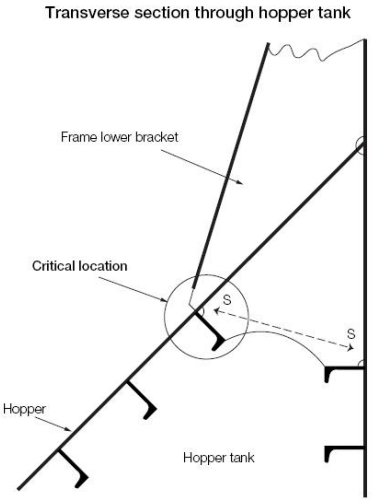
</td></tr>
<tr><td rowspan="2">Structural details</td><td>Applicable structures</td><td colspan="2">Explanations</td></tr>
<tr><td>Connection of hopper side upper intermediate brackets below side shell frame lower brackets</td><td colspan="2">Where the frame lower brackets are not positioned directly above a ring web, supporting brackets are to be provided. In the design ensure that if a hopper tank sloping longitudinal is positioned below the end of the frame lower bracket, the stiffener cut-out is avoided or closed with a full collar.</td></tr>
<tr><td>Building tolerances</td><td colspan="3">Ensure good alignment between lower frame bracket and intermediate bracket. Maximum misalignment is to be not greater than (t/3) where t is the thinner of the webs to be aligned. See relevant requirements in Section 11, PART TEN of Rules for Classification of Sea-going Steel Ships.</td></tr>
<tr><td>Welding requirements</td><td colspan="3">Ensure start and stop of welding is as far away as practicable from the unsupported edge corners in the supporting brackets. A wraparound weld, with smooth transition and free of weld defects liable to cause stress concentration, i.e. undercuts, notches etc., in way of frame lower bracket ends. Finally the longitudinal scallop is closed by full penetration welding using full collar of the same material and thickness. See Section 4, Chapter 1, PART TWO of Rules for Classification of Sea-going Steel Ships for other requirements.</td></tr>
</table>

Structural details of bulk carriers	Table 6

Area: Hold frames

Critical location: Connection of side shell frames to hopper and topside tank sloping plating

Critical areas	Structural details
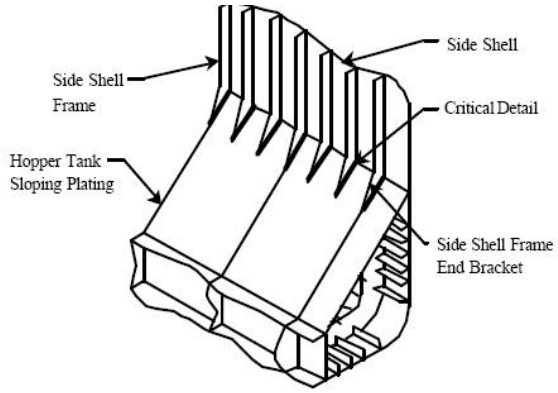	(A) Soft toe 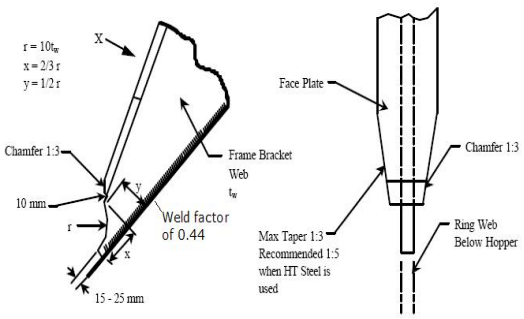
Critical locations	(B) Extended toe
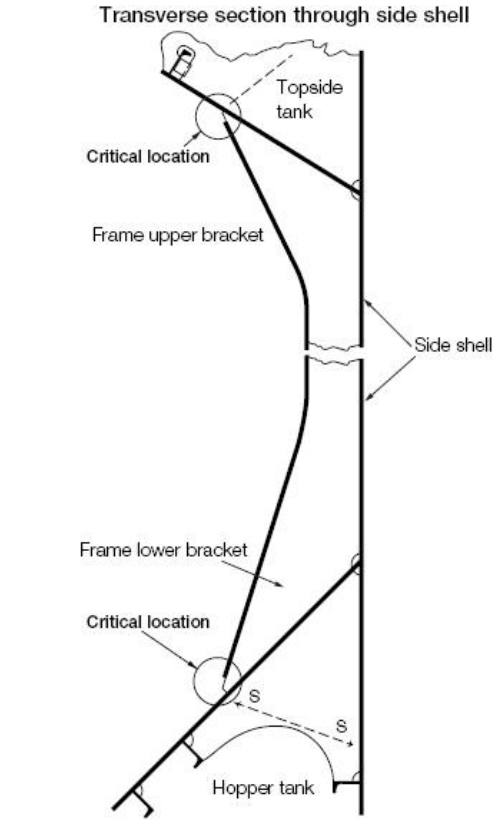	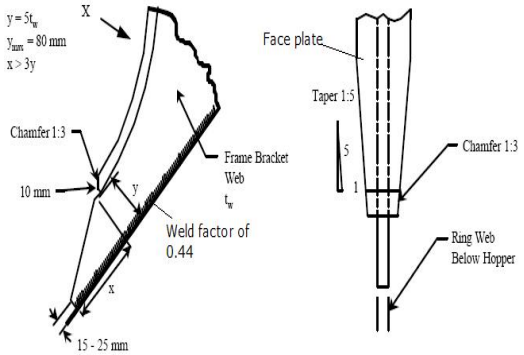 Note: Where the thickness of face plate is less than 25 mm, the taper may be increased adequately.

	Applicable structures	Explanations
Structural details	Toe connection of side shell frame lower brackets to the hopper tank sloping plates	Soft toe or extended toe is to be fitted and ensure that a long enough leg length is used to allow adequate tapering down to the toe end of the frame end brackets
	Toe connection of side shell frame upper brackets to the topside tank sloping plates	
Building	Ensure good alignment between side shell frame lower and upper bracket and transverse ring	

tolerances	webs or intermediate brackets. Maximum misalignment is to be not greater than (t/3) where t is the thinner of the webs to be aligned. See relevant requirements in Section 11, PART TEN of Rules for Classification of Sea-going Steel Ships.
Welding requirements	Frames and brackets are connected to side shell plates, hopper tank and topside tank sloping plates by continuous fillet welds, where the thickness of weld throat is to be: 0.44t in (a) 0.40t in (b), where t is thickness of the thinner of two connected members. Ensure start and stop of welding is as far away as practicable from the toe of the frame brackets. A wraparound weld, with smooth transition and free of weld defects liable to cause stress concentration, i.e. undercuts, notches etc, around the toe of the end bracket connections to hopper plating.

<table>
<tr><td colspan="3">Structural details of bulk carriers</td><td>Table 7</td></tr>
<tr><td colspan="4">Area: Topside tanks
Critical location: Lower intermediate brackets in topside tanks</td></tr>
<tr><td colspan="2">Critical areas</td><td colspan="2">Structural details</td></tr>
<tr><td colspan="2">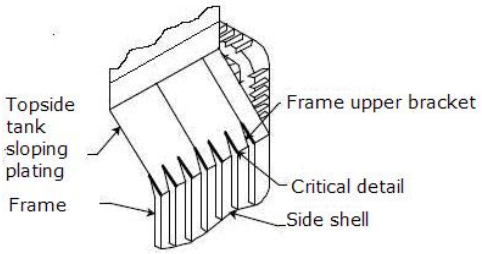
</td><td colspan="2" rowspan="2">(A) A longitudinal is fitted in way of the side shell frame bracket toe.
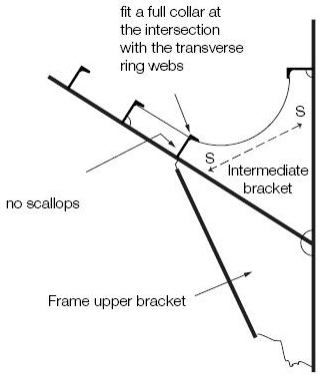

(B) A longitudinal is not fitted in way of the side shell frame bracket toe.
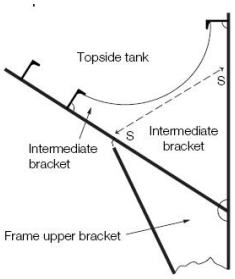
</td></tr>
<tr><td colspan="2">Critical locations</td></tr>
<tr><td colspan="2">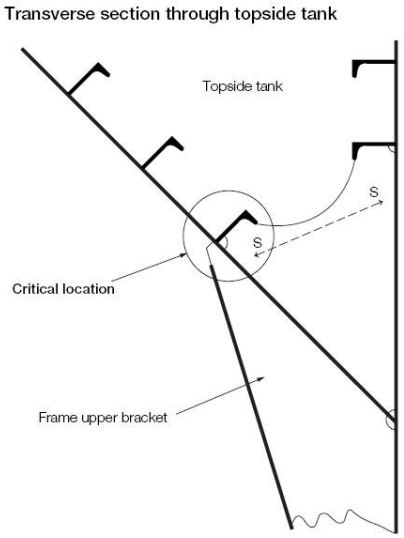
</td><td colspan="2"></td></tr>
<tr><td rowspan="2">Structural details</td><td>Applicable structures</td><td colspan="2">Explanations</td></tr>
<tr><td>Connection of topside lower intermediate brackets above side shell frame upper bracket</td><td colspan="2">Where the frames upper brackets are not positioned directly below a topside ring web, supporting brackets are to be provided. Where a longitudinal stiffener in the topside tank is positioned directly above the end of the side shell frame upper bracket, the stiffener cut-out is avoided or closed with a full collar.</td></tr>
<tr><td>Building tolerances</td><td colspan="3">Ensure good alignment between side shell frame upper bracket and supporting bracket. Maximum misalignment is to be not greater than (t/3) where t is the thinner of the webs to be aligned. See relevant requirements in Section 11, PART TEN of Rules for Classification of Sea-going Steel Ships.</td></tr>
<tr><td>Welding requirements</td><td colspan="3">Ensure start and stop of welding is as far away as practicable from the unsupported edge corners in the supporting brackets. A wraparound weld, with smooth transition and free of weld defects liable to cause stress concentration, i.e. undercuts, notches etc, around the end of frame upper bracket. Finally the scallop (if any) is closed by full penetration welding using full collar of the same material and thickness. See Section 4, Chapter 1, PART TWO of Rules for Classification of Sea-going Steel Ships for other requirements.</td></tr>
</table>

Structural details of bulk carriers	Table 8

Area: Topside tanks

Critical location: Heel and toe connection of the topside tank transverse ring web stiffeners to the side shell longitudinals

Critical areas	Structural details
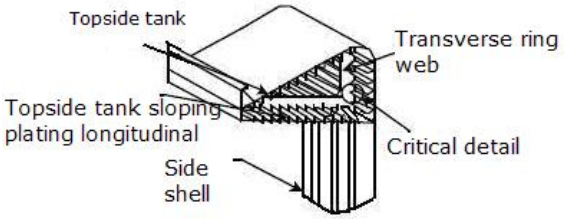	(A) Soft heel 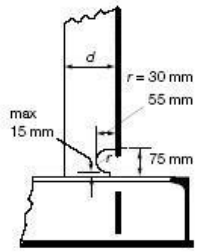
Critical locations	(B) Soft toe and soft heel 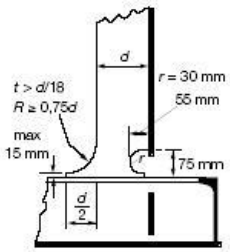
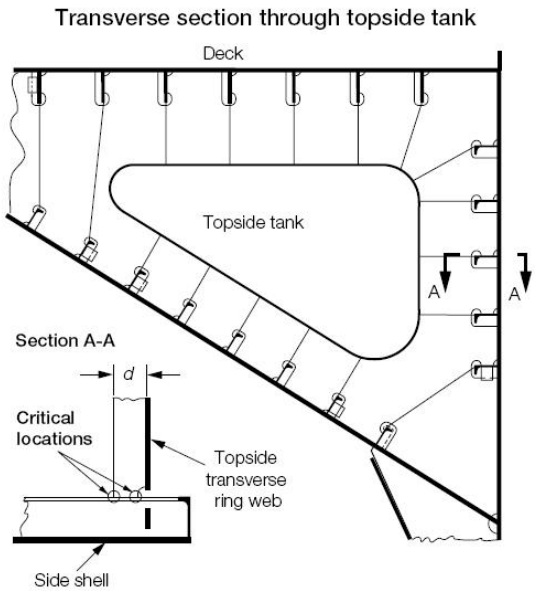	(C) Soft toe and soft backing bracket 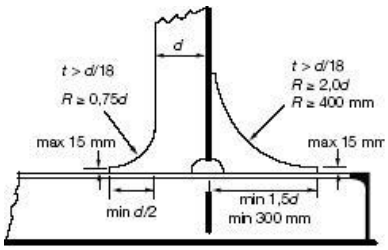

	Applicable structures	Explanations
Structural details	For high tensile steel asymmetrical longitudinals	All longitudinals are to be fitted with (C) soft toe and soft backing bracket
	For high tensile steel symmetrical longitudinals	All longitudinals are to be fitted with (B) soft toe and soft heel
	For mild steel asymmetrical longitudinals	All longitudinals are to be fitted with (B) soft toe and soft heel
	For mild steel symmetrical longitudinals	All longitudinals are to be fitted with (A) soft heel
Building tolerances	Ensure good alignment between longitudinal stiffener web, topside ring web stiffener and backing bracket, if fitted. See relevant requirements in Section 11, PART TEN of Rules for Classification of Sea-going Steel Ships.	
Welding requirements	Ensure start and stop of welding is as far away as practicable from the heel and toe. A wraparound weld, with smooth transition and free of weld defects liable to cause stress concentration, i.e. undercuts, notches etc, around the toe and heel connection of the stiffener and bracket to longitudinal. See Section 4, Chapter 1, PART TWO of Rules for Classification of Sea-going Steel Ships for other requirements.	

Structural details of bulk carriers	Table 9

Area: Topside tanks

Critical location: Heel and toe connection of the topside tank transverse ring web tripping brackets to the side shell longitudinals

Critical areas	Structural details
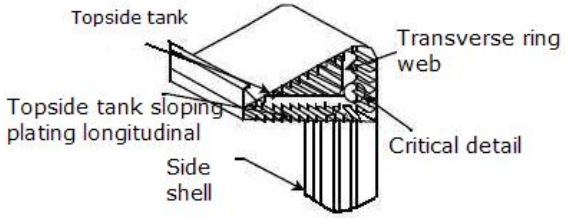	(A) Soft heel 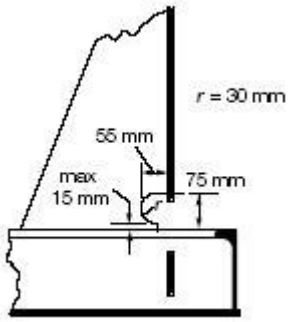
Critical locations	(B) Soft toe and soft heel 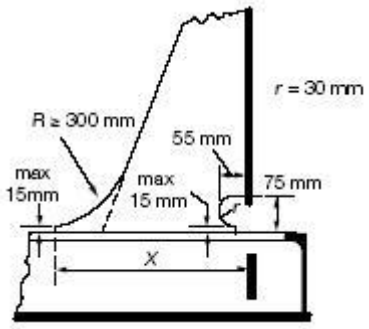
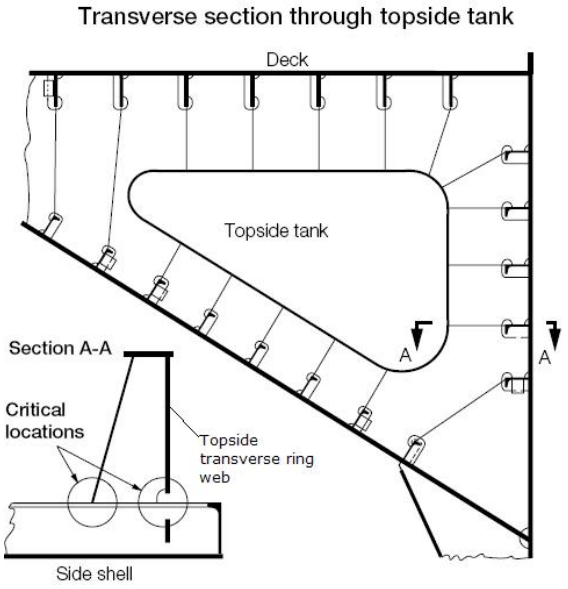	(C) Soft toe and soft backing bracket 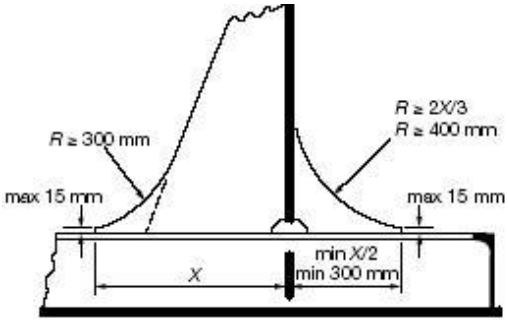

	Applicable structures	Explanations
Structural details	For high tensile steel asymmetrical longitudinals	All longitudinals are to be fitted with (C) soft toe and soft backing bracket
	For high tensile steel symmetrical longitudinals	All longitudinals are to be fitted with (B) soft toe and soft heel
	For mild steel asymmetrical longitudinals	All longitudinals are to be fitted with (B) soft toe and soft heel
	For mild steel symmetrical longitudinals	All longitudinals are to be fitted with (A) soft heel
Building	Ensure good alignment between longitudinal stiffener web, topside transverse ring web bracket	

tolerances	and backing bracket, if fitted. See relevant requirements in Section 11, PART TEN of Rules for Classification of Sea-going Steel Ships.
Welding requirements	Ensure start and stop of welding is as far away as practicable from the heel and toe. A wraparound weld, with smooth transition and free of weld defects liable to cause stress concentration, i.e. undercuts, notches etc, around the toe and heel connection of the tripping bracket and backing bracket to longitudinal. See Section 4, Chapter 1, PART TWO of Rules for Classification of Sea-going Steel Ships for other requirements.

<table>
<tr><td colspan="3">Structural details of bulk carriers</td><td>Table 10</td></tr>
<tr><td colspan="4">Area: Topside tanks
Critical location: Heel and toe connection of the topside tank transverse ring web stiffeners to the topside tank sloping plate longitudinals</td></tr>
<tr><td colspan="2">Critical areas</td><td colspan="2">Structural details</td></tr>
<tr><td colspan="2">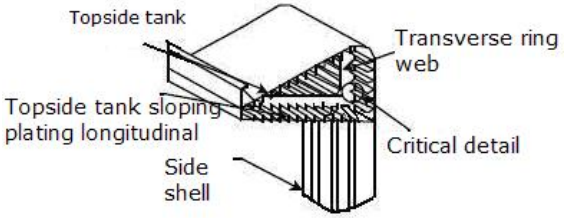
</td><td colspan="2" rowspan="2">(A) Soft heel
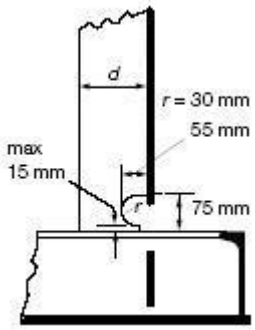

(B) Soft toe and soft heel
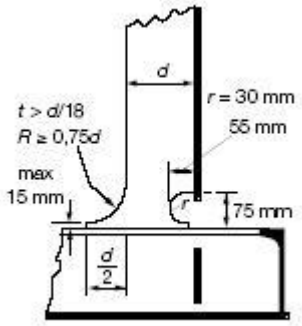

(C) Soft toe and soft backing bracket
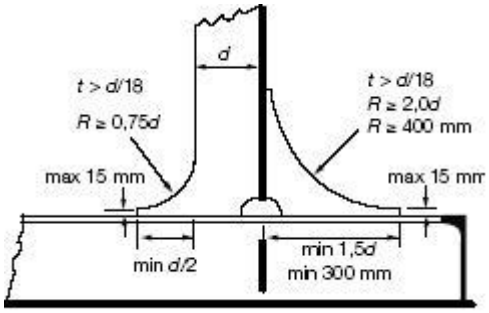
</td></tr>
<tr><td colspan="2">Critical locations</td></tr>
<tr><td colspan="2">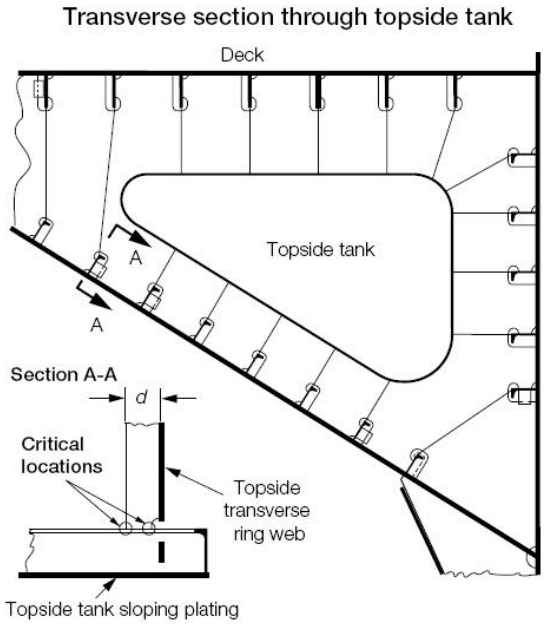
</td></tr>
<tr><td rowspan="5">Structural details</td><td>Applicable structures</td><td colspan="2">Explanations</td></tr>
<tr><td>For high tensile steel asymmetrical longitudinals</td><td colspan="2">All longitudinals are to be fitted with (C) soft toe and soft backing bracket.</td></tr>
<tr><td>For high tensile steel symmetrical longitudinals</td><td colspan="2">All longitudinals are to be fitted with (B) soft toe and soft heel.</td></tr>
<tr><td>For mild steel asymmetrical longitudinals</td><td colspan="2">All longitudinals are to be fitted with (B) soft toe and soft heel.</td></tr>
<tr><td>For mild steel symmetrical longitudinals</td><td colspan="2">All longitudinals are to be fitted with (A) soft heel.</td></tr>
<tr><td>Building</td><td colspan="3">Ensure good alignment between longitudinal stiffener web, topside ring web stiffener and</td></tr>
</table>

tolerances	backing bracket, if fitted. See relevant requirements in Section 11, PART TEN of Rules for Classification of Sea-going Steel Ships.
Welding requirements	Ensure start and stop of welding is as far away as practicable from the heel and toe. A wraparound weld, with smooth transition and free of weld defects liable to cause stress concentration, i.e. undercuts, notches etc, around the toe and heel connection of the stiffener and bracket to longitudinal. See Section 4, Chapter 1, PART TWO of Rules for Classification of Sea-going Steel Ships for other requirements.

<table>
<tr><td colspan="3">Structural details of bulk carriers</td><td>Table 11</td></tr>
<tr><td colspan="4">Area: Topside tanks
Critical location: Heel and toe connection of the topside tank transverse ring web tripping brackets to the topside tank sloping plate longitudinals</td></tr>
<tr><td colspan="2">Critical areas</td><td colspan="2">Structural details</td></tr>
<tr><td colspan="2">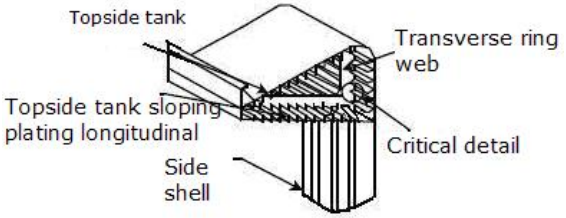
</td><td colspan="2" rowspan="2">(A) Soft heel
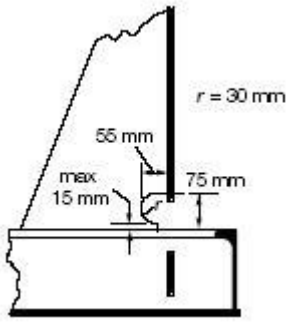

(B) Soft toe and soft heel
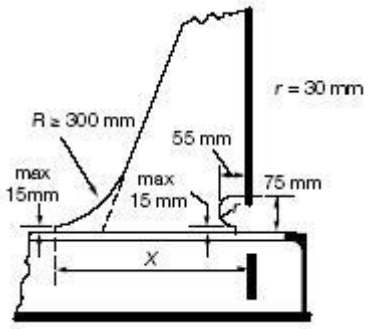

(C) Soft toe and soft backing bracket
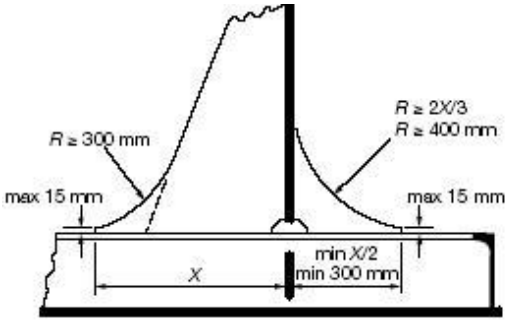
</td></tr>
<tr><td colspan="2">Critical locations</td></tr>
<tr><td colspan="2">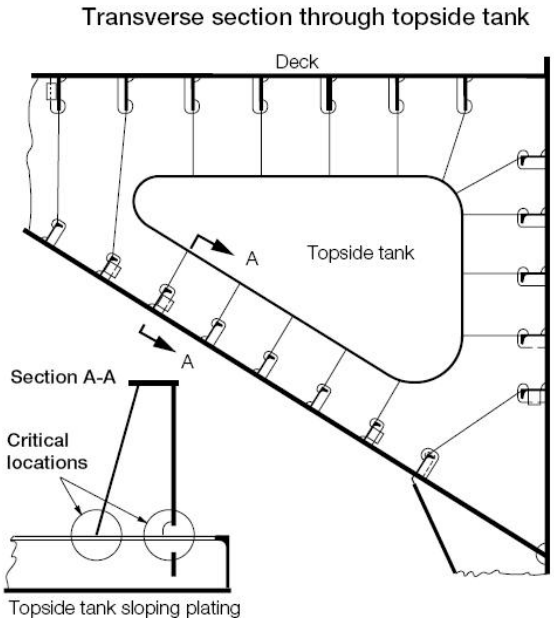
</td></tr>
<tr><td rowspan="5">Structural details</td><td>Applicable structures</td><td colspan="2">Explanations</td></tr>
<tr><td>For high tensile steel asymmetrical longitudinals</td><td colspan="2">All longitudinals are to be fitted with (C) soft toe and soft backing bracket.</td></tr>
<tr><td>For high tensile steel symmetrical longitudinals</td><td colspan="2">All longitudinals are to be fitted with (B) soft toe and soft heel.</td></tr>
<tr><td>For mild steel asymmetrical longitudinals</td><td colspan="2">All longitudinals are to be fitted with (B) soft toe and soft heel.</td></tr>
<tr><td>For mild steel symmetrical longitudinals</td><td colspan="2">All longitudinals are to be fitted with (A) soft heel.</td></tr>
<tr><td>Building</td><td colspan="3">Ensure good alignment between longitudinal stiffener web, topside ring web tripping bracket</td></tr>
</table>

tolerances	and backing bracket, if fitted. See relevant requirements in Section 11, PART TEN of Rules for Classification of Sea-going Steel Ships.
Welding requirements	Ensure start and stop of welding is as far away as practicable from the heel and toe. A wraparound weld, with smooth transition and free of weld defects liable to cause stress concentration, i.e. undercuts, notches etc, around the toe and heel connection of the tripping bracket and backing bracket to longitudinal. See Section 4, Chapter 1, PART TWO of Rules for Classification of Sea-going Steel Ships for other requirements.

Structural details of bulk carriers	Table 12

Area: Deck outside line of openings

Critical location: Deck transverses, stiffener connection to longitudinals on upper deck

Critical areas	Structural details

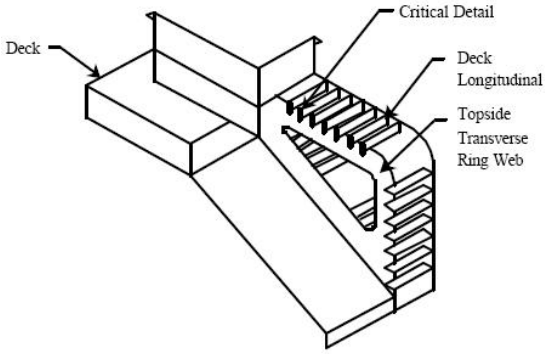

Critical locations

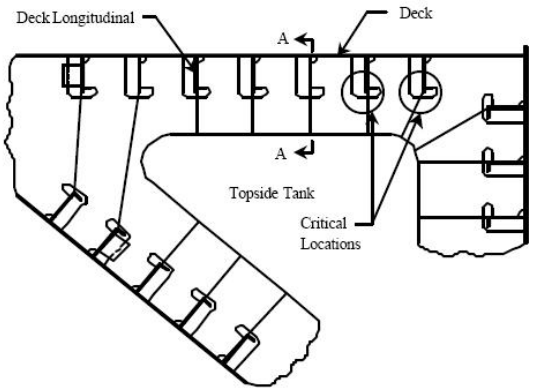

Section A-A

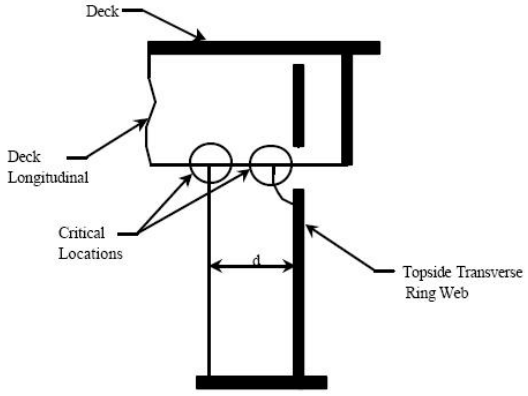

(A) Soft heel

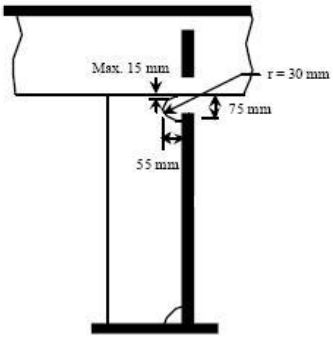

(B) Soft toe and soft heel

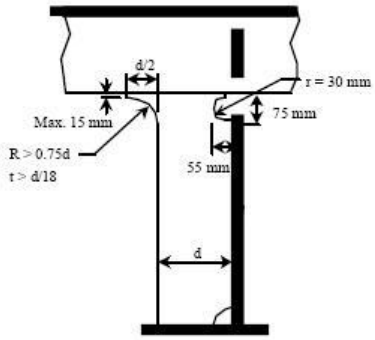

(C) Soft toe and soft backing bracket

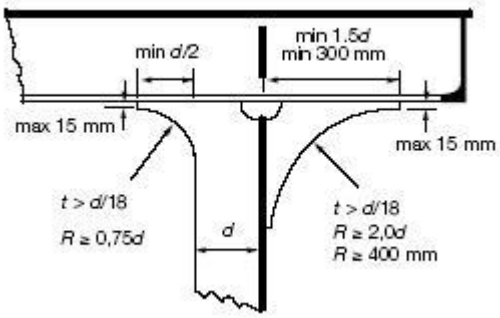

	Applicable structures	Explanations
Structural details	For high tensile steel asymmetrical longitudinals	All longitudinals are to be fitted with (C) soft toe and soft backing bracket.
	For high tensile steel symmetrical longitudinals	All longitudinals are to be fitted with (B) soft toe and soft heel.
	For mild steel asymmetrical longitudinals	All longitudinals are to be fitted with (B) soft toe and soft heel.
	For mild steel symmetrical longitudinals	All longitudinals are to be fitted with (A) soft heel.

Building tolerances	Ensure good alignment between longitudinal stiffener web, topside transverse ring web stiffener and backing bracket, if fitted. See relevant requirements in Section 11, PART TEN of Rules for Classification of Sea-going Steel Ships.
Welding requirements	Ensure start and stop of welding is as far away as practicable from the heel and toe. A wraparound weld, with smooth transition and free of weld defects liable to cause stress concentration, i.e. undercuts, notches etc, around the toe and heel connection of the stiffener to longitudinal. See Section 4, Chapter 1, PART TWO of Rules for Classification of Sea-going Steel Ships for other requirements.

<table>
<tr><td colspan="3">Structural details of bulk carriers</td><td>Table 13</td></tr>
<tr><td colspan="4">Area: Deck outside line of openings
Critical location: Deck transverses, tripping bracket connection to longitudinals on upper deck</td></tr>
<tr><td colspan="2">Critical areas</td><td colspan="2">Structural details</td></tr>
<tr><td colspan="2" rowspan="2">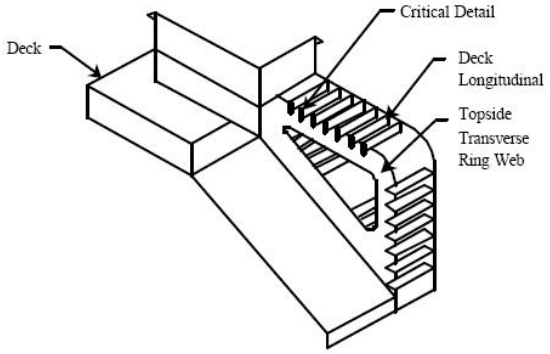
</td><td colspan="2" rowspan="2">(A) Soft heel
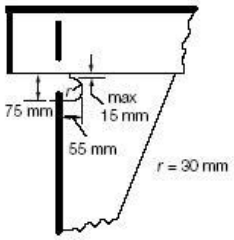

(B) Soft toe and soft heel
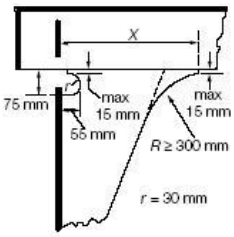

(C) Soft toe and soft backing bracket
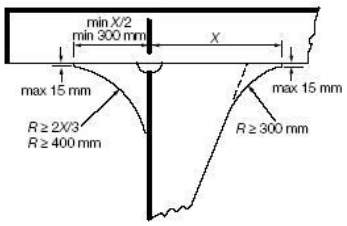
</td></tr>
<tr><td>Critical locations</td></tr>
<tr><td colspan="2">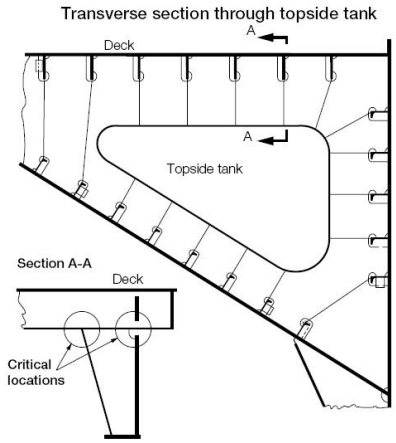
</td><td colspan="2"></td></tr>
<tr><td rowspan="5">Structural details</td><td>Applicable structures</td><td colspan="2">Explanations</td></tr>
<tr><td>For high tensile steel asymmetrical longitudinals</td><td colspan="2">All longitudinals are to be fitted with (C) soft toe and soft backing bracket.</td></tr>
<tr><td>For high tensile steel symmetrical longitudinals</td><td colspan="2">All longitudinals are to be fitted with (B) soft toe and soft heel.</td></tr>
<tr><td>For mild steel asymmetrical longitudinals</td><td colspan="2">All longitudinals are to be fitted with (B) soft toe and soft heel.</td></tr>
<tr><td>For mild steel symmetrical longitudinals</td><td colspan="2">All longitudinals are to be fitted with (A) soft heel.</td></tr>
<tr><td>Building tolerances</td><td colspan="3">Ensure good alignment between longitudinal stiffener web, topside transverse ring web bracket and backing bracket, if fitted. See relevant requirements in Section 11, PART TEN of Rules for Classification of Sea-going Steel Ships.</td></tr>
<tr><td>Welding requirements</td><td colspan="3">Ensure start and stop of welding is as far away as practicable from the heel and toe. A wraparound weld, with smooth transition and free of weld defects, i.e. unsolder, unfilled crater etc, around the toe and heel connection of the tripping bracket and backing bracket to longitudinal. See Section 4, Chapter 1, PART TWO of Rules for Classification of Sea-going Steel Ships for other requirements.</td></tr>
</table>

Structural details of bulk carriers		Table 14
Area: Deck between hatches Critical location: Hatch corners and hatch end beam connection to topside tank transverse ring web		
Critical areas		Structural details
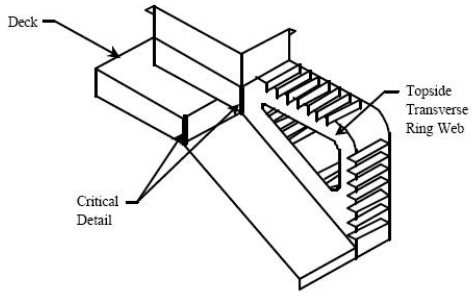		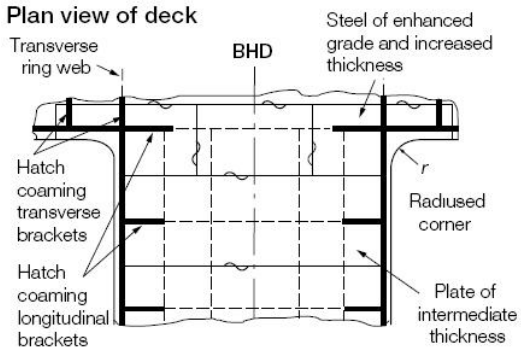
Critical locations		Hatch end beam improvement
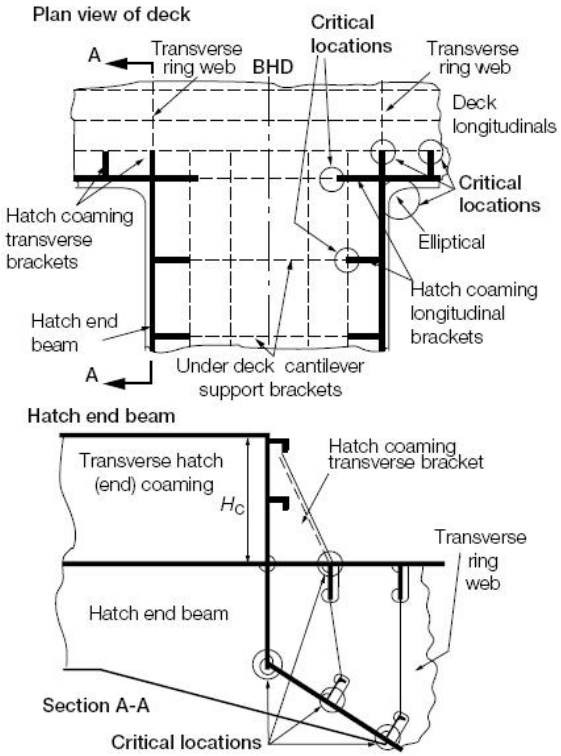		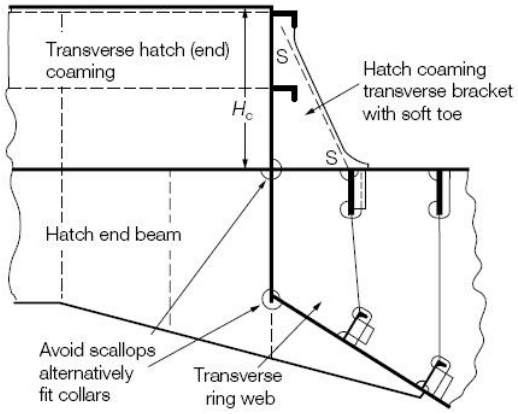
Structural details	Applicable structures	Explanations
	Deck plating in way of the hatch corners	Radiused hatch corner insert plates are to be fitted in accordance with relevant requirements of Chapters 1 and 2, PART TWO of Rules for Classification of Sea-going Steel Ships. Use insert plates of enhanced steel grade and thickness. Any welding or fittings is to be kept clear of the deck plating in way of hatch corners and the corner free edge is to be ground smooth.
	Connection of hatch end beam to topside tank ring web	Ensure that hatch end beam is in line with a topside transverse ring web. Avoid scallops and fitting collars.

	Coaming transverse bracket in way of hatch corners	Bracket with soft toe is to be fitted.
Building tolerances	Ensure good alignment between hatch end beam and support in the topside tank. Maximum misalignment is to be not greater than (t/3) where t is the thinner of the webs to be aligned. See relevant requirements in Section 11, PART TEN of Rules for Classification of Sea-going Steel Ships.	
Welding requirements	Ensure start and stop of welding is as far away as practicable from the toes of brackets or corners. A wraparound weld, with smooth transition and free of weld defects liable to cause stress concentration, i.e. undercuts, notches etc, around the toe connection of the bracket to upper deck. See Section 4, Chapter 1, PART TWO of Rules for Classification of Sea-going Steel Ships for other requirements.	

Structural details of bulk carriers	Table 15

Area: Deck between hatches

Critical location: Hatch coaming longitudinal end brackets

Critical areas	Structural details

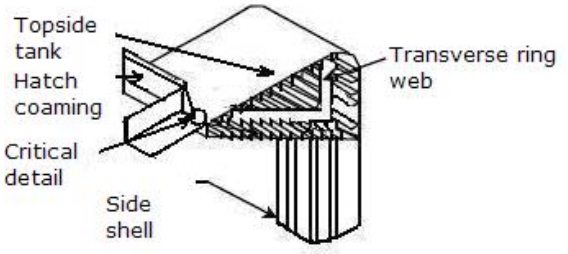

Critical locations

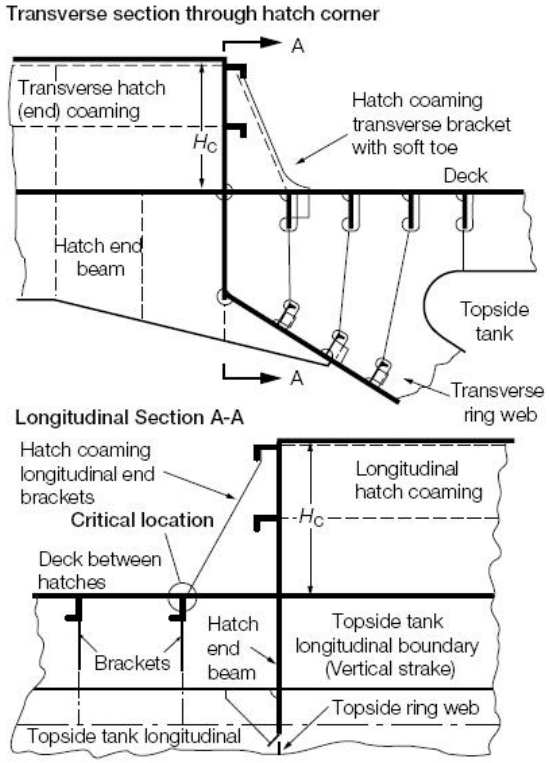

(A) Soft toe

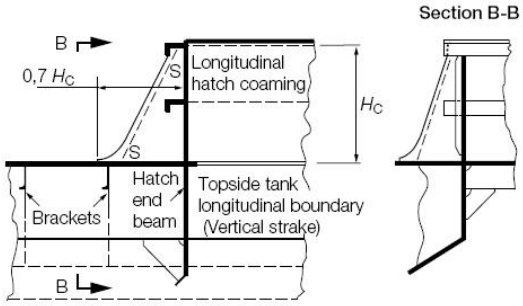

(B) Soft bracket fitted with soft toe

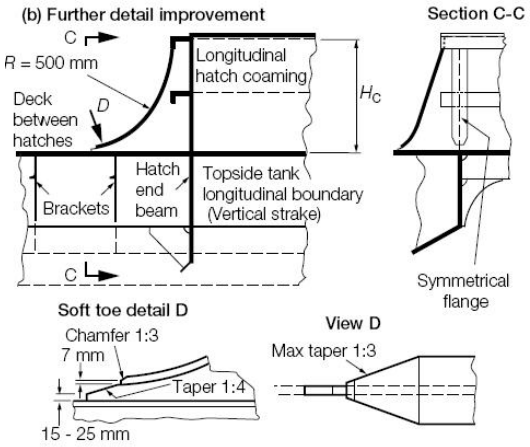

	Applicable structures	Explanations
Structural details	Toe connection of longitudinal hatch coaming end bracket to the deck plating	As a minimum, the soft toe is to be fitted in accordance with (A). To ensure smooth transition of stresses from the deck, the soft bracket fitted with soft toe is to be used in accordance with (B).

	Longitudinal hatch coaming end bracket	Any piping holes are to be avoided in the end bracket as far as possible and, if any, suitable reinforcement is to be provided.
Building tolerances	Ensure good alignment between hatch coaming end bracket and supporting structure. Maximum misalignment is to be not greater than (t/3) where t is the thinner of the webs to be aligned. See relevant requirements in Section 11, PART TEN of Rules for Classification of Sea-going Steel Ships.	
Welding requirements	Use full penetration welding for a distance of 0.15*Hc* from the bracket toe end ensuring start and stop of welding is as far away as practicable from the toes of brackets. A wraparound weld, with smooth transition and free of weld defects liable to cause stress concentration, i.e. undercuts, notches etc, around the toe connection of the bracket to the deck plating. See Section 4, Chapter 1, PART TWO of Rules for Classification of Sea-going Steel Ships for other requirements.	

Structural details of bulk carriers	Table 16

Area: Transverse bulkheads (deep tank)

Critical location: Connections of bottom and inner bottom longitudinals below lower stool

Critical areas	Structural details
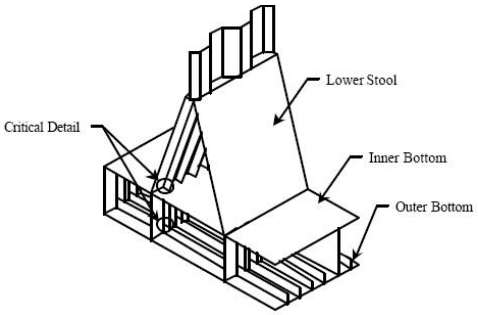	Symmetrical soft toe and soft backing bracket 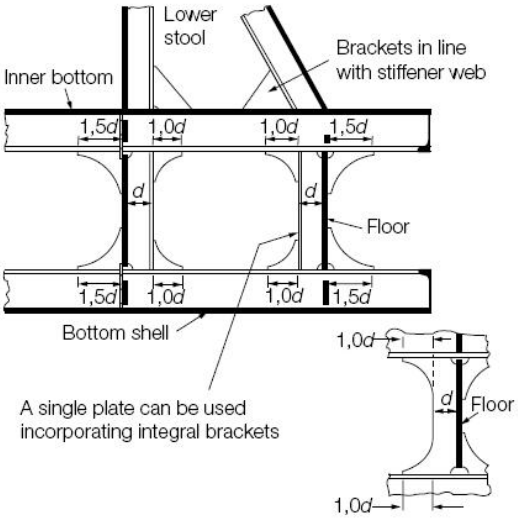
Critical locations	
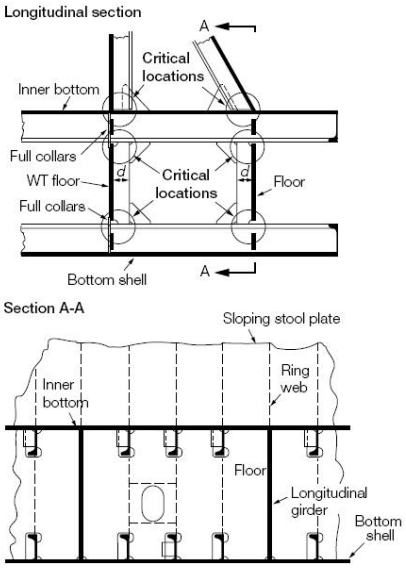	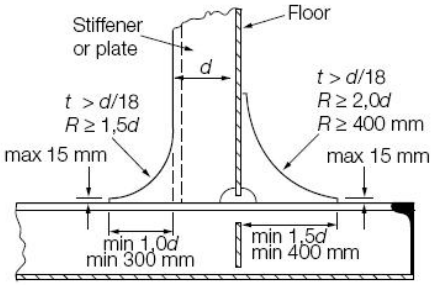

	Applicable structures	Explanations
Structural details	Connections of floor vertical stiffeners to the bottom and inner bottom longitudinals below lower stool	Symmetrical soft toe and soft backing bracket is to be fitted.
	Connections of lower stool to the inner bottom plate	Brackets in line with stiffener web
Building tolerances	Ensure good alignment between brackets and stiffener webs. Maximum misalignment is to be not greater than (t/3) where t is the thinner of the webs to be aligned. See relevant requirements in Section 11, PART TEN of Rules for Classification of Sea-going Steel Ships.	
Welding requirements	Use fillet welding with a weld factor of 0.44 between inner bottom and floors ensuring start and stop of welding is as far away as practicable from the toes of brackets or corners. A wraparound weld, with smooth transition and free of weld defects liable to cause stress concentration, i.e. undercuts, notches etc, around the toe connection of stiffeners and backing brackets to longitudinal. See Section 4, Chapter 1, PART TWO of Rules for Classification of Sea-going Steel Ships for other requirements.	

Structural details of bulk carriers	Table 17

Area: Transverse bulkheads (deep tank)

Critical location: Connections of lower stool to inner bottom in way of double bottom girders

Critical areas	Structural details
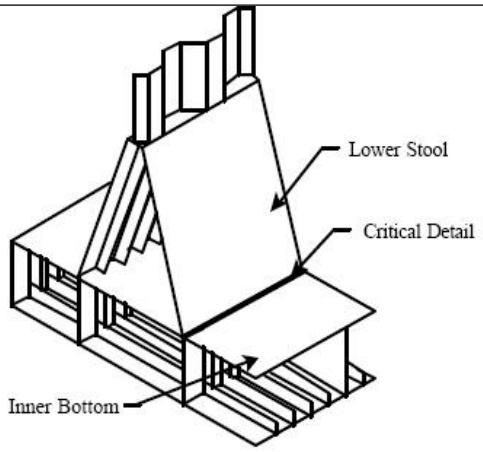	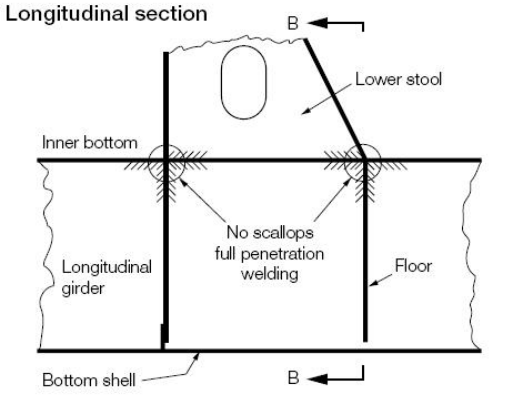
Critical locations	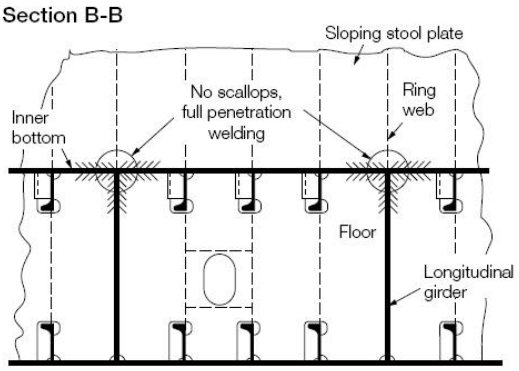
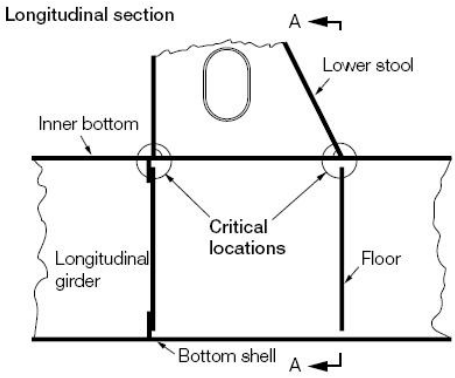 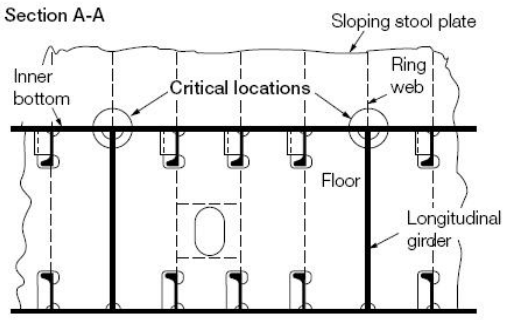	

	Applicable structures	Explanations
Structural details	Connections of stools to the inner bottom plating in way of double bottom girders	Avoid the use of scallops on floors and lower stool ring webs near the intersection with the inner bottom. Minimise the number and size of manholes near the stool connections as far as practicable. Avoid the use of scallops in stiffener cut-outs on floors in line with stool plates and collars are to be fitted. Provision of access openings in floors is to be avoided in the vicinity of double bottom girders. Particular attention is to be given to the design and positioning of bilge

		wells and suction intakes on the inner bottom plate.
Building tolerances	Ensure good alignment between double bottom girders and lower stool webs and between floors and stool plates as far as possible. See relevant requirements in Section 11, PART TEN of Rules for Classification of Sea-going Steel Ships.	
Welding requirements	For ballast hold side, use full penetration welding between inner bottom and stool plates and near the corner intersections of primary members, floor plates, girders and lower stool webs, see Figure above. For dry cargo hold side, use deep penetration weld between inner bottom and stool plates and between inner bottom and floor plates. Ensure start and stop of welding is as far away as practicable from the corners. The weld sequence is to be such as to avoid lamellar tearing. Smooth transition from welds completed to inner bottom plating is to be achieved. See Section 4, Chapter 1, PART TWO of Rules for Classification of Sea-going Steel Ships for other requirements.	

<table>
<tr><td colspan="3">Structural details of bulk carriers</td><td>Table 18</td></tr>
<tr><td colspan="4">Area: Transverse bulkheads (deep tank)
Critical location: Connections in way of lower stool shelf plate</td></tr>
<tr><td colspan="2">Critical areas</td><td colspan="2">Structural details</td></tr>
<tr><td colspan="2">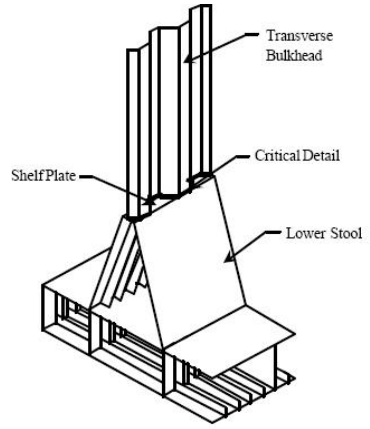
</td><td colspan="2" rowspan="2">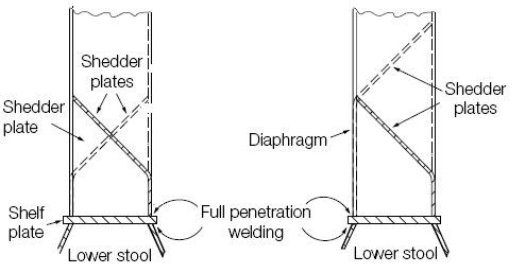

Section A-A
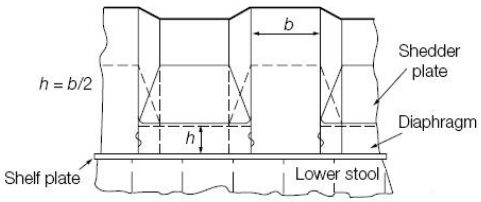
</td></tr>
<tr><td colspan="2">Critical locations</td></tr>
<tr><td colspan="2">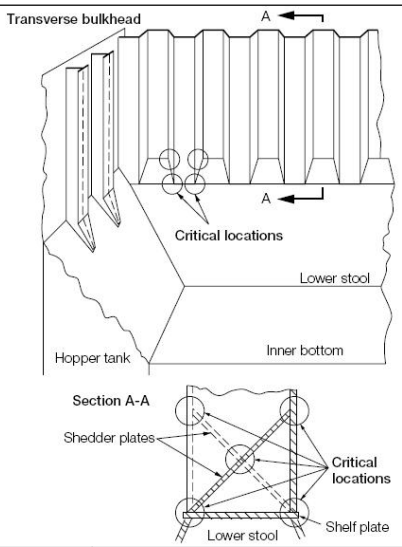
</td></tr>
<tr><td rowspan="2">Structural details</td><td>Applicable structures</td><td>Explanations</td></tr>
<tr><td>Connections of lower stool shelf plate to lower stool and corrugated transverse bulkheads, connections of shedder plates to corrugated transverse bulkhead.</td><td>Full penetration weld is to be incorporated at the connection of the corrugated bulkhead and stool wall plate to top plate of lower stool. Diaphragms are to be fitted to the shedder plate in line with the face of the corrugation. The minimum height of the diaphragm plate is to be taken as half the corrugated bulkhead flange width. Avoid crossing of shedder plate as far as possible. Where adjacent shedder plates cross, bracketed stiffener is to be fitted at the crossing points underneath the shedder plating facing a ballast hold.</td></tr>
<tr><td>Building tolerances</td><td colspan="2">Ensure good alignment between lower stool sloping plates and corrugation faces as far as possible. See relevant requirements in Section 11, PART TEN of Rules for Classification of Sea-going Steel Ships.</td></tr>
<tr><td>Welding</td><td colspan="2">Use full penetration welding at the connections of the bulkhead corrugations, diaphragm and the</td></tr>
</table>

requirements	stool sloping plates to the lower stool shelf plate. Use one-side penetration welding or other equivalent methods at the connections of the shedder plates to bulkhead corrugations and diaphragm. The weld sequence is to be such as to avoid lamellar tearing. Ensure start and stop of welding is as far away as practicable from the corners of the corrugations. Smooth transition from welds completed to bulkhead corrugations, lower stool shelf plate and stool wall plate is to be achieved. The lower stool shelf plate is recommended to be of grade 'Z' steel.

Structural details of bulk carriers	Table 19

Area: Transverse bulkheads (deep tank)

Critical location: Connections in way of upper boundaries of corrugated bulkheads.

Critical areas	Structural details
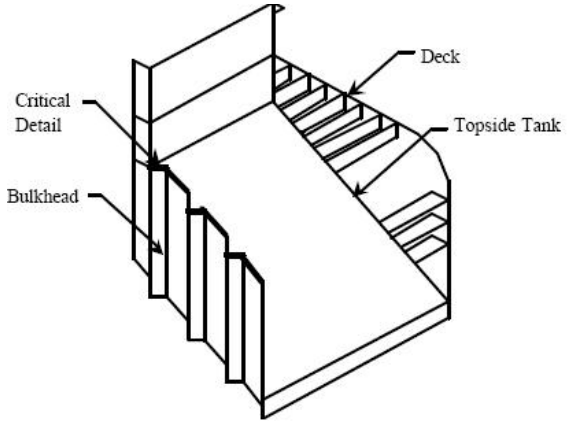	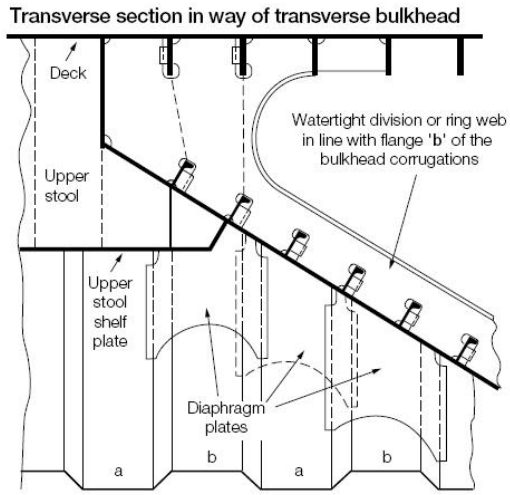
Critical locations	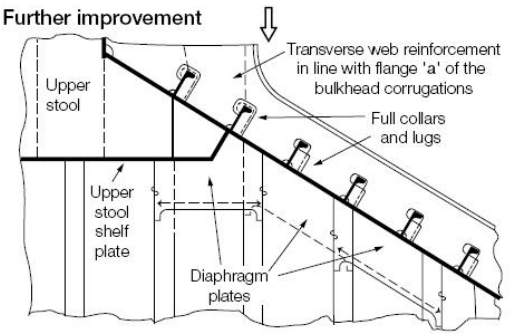
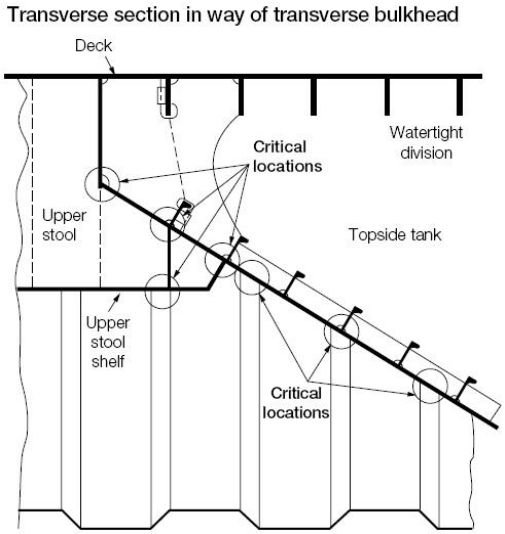	

	Applicable structures	Explanations
Structural details	Connections of corrugated transverse bulkhead to the topside tank sloping plating and upper stool	Diaphragm plates between corrugations can be used to increase attachment area of the transverse bulkhead.
Building tolerances	Ensure good alignment between transverse web and the flange of corrugations. Maximum misalignment is to be not greater than (t/3) where t is the thinner of the plates to be aligned. See relevant requirements in Section 11, PART TEN of Rules for Classification of Sea-going Steel Ships.	
Welding requirements	Use fillet welding with a weld factor of 0.44 for connections of transverse bulkhead to topside tank and upper stool shelf plating. Ensure start and stop of welding is as far away as practicable from the critical corners. The spacing of T joints is to be minimized. The welding sequence is to be such as to minimize restraint.	

<table>
<tr><td colspan="3">Structural details of oil tankers</td><td>Table 1</td></tr>
<tr><td colspan="4">Area: Double side
Critical location: Asymmetrical higher tensile steel side longitudinal connection to transverse web flat-bar stiffener (between the baseline and 0.8D above the baseline)</td></tr>
<tr><td colspan="2">Critical areas</td><td colspan="2">Structural details</td></tr>
<tr><td colspan="2">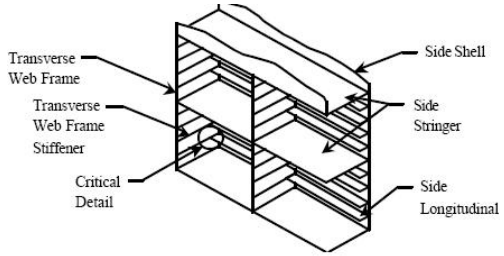
</td><td colspan="2" rowspan="3">(A) Soft heel
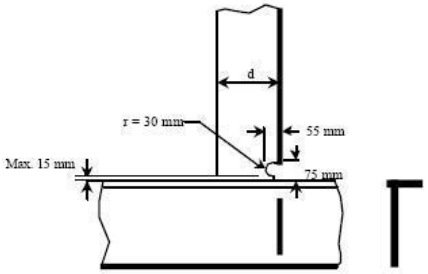

(B) Soft toe and soft heel
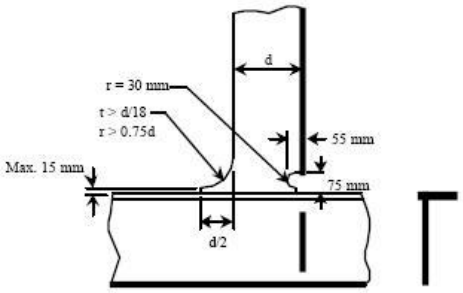

(C) Soft toe and soft backing bracket
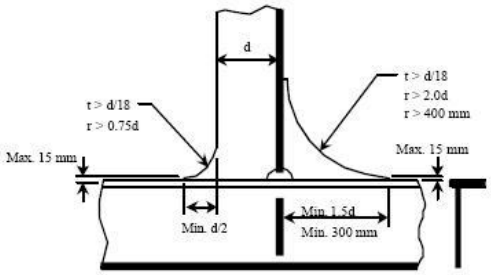
</td></tr>
<tr><td colspan="2">Critical locations</td></tr>
<tr><td colspan="2">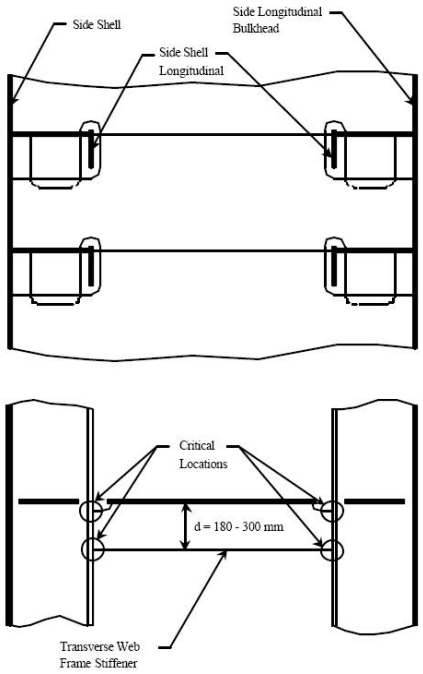
</td></tr>
<tr><td rowspan="2">Structural details</td><td>Applicable structures</td><td>Explanations</td></tr>
<tr><td>Asymmetrical side longitudinal connection to transverse web flat-bar stiffener</td><td>(C) Soft toe and soft backing bracket is to be fitted.</td></tr>
<tr><td>Building tolerances</td><td colspan="3">Ensure good alignment of the web stiffener, the backing bracket and the web of the side longitudinal.</td></tr>
<tr><td>Welding requirements</td><td colspan="3">Fillet welding having minimum weld factor of 0.44 (Connection of web stiffeners to face plates of side longitudinals. Backing brackets to face plates of side longitudinals). A wraparound weld, with smooth transition and free of weld defects liable to cause stress concentration, i.e. undercuts, notches etc, around the heel and toe connections of stiffeners and backing bracket to the longitudinal face plate. See Section 4, Chapter 1, PART TWO of Rules for Classification of Sea-going Steel Ships for other requirements.</td></tr>
</table>

<table>
<tr><td colspan="2">Structural details of oil tankers</td><td>Table 2</td></tr>
<tr><td colspan="3">Area: Double side
Critical location: Symmetrical higher tensile steel side longitudinal connection to transverse web flat-bar stiffener (between the baseline and 0.8D above the baseline)</td></tr>
<tr><td colspan="2">Critical areas</td><td>Structural details</td></tr>
<tr><td colspan="2">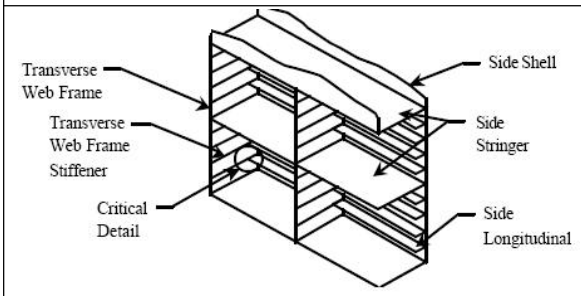
</td><td rowspan="2">(A) Soft heel
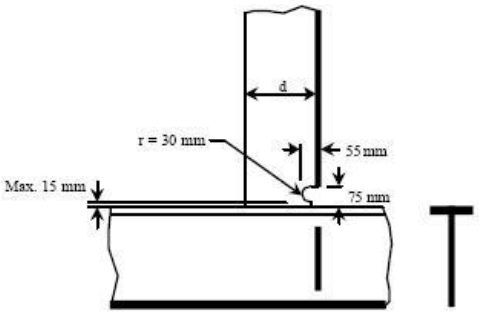

(B) Soft toe and soft heel
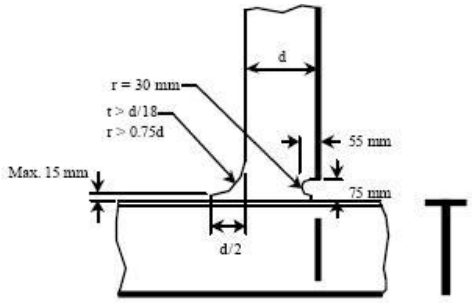

(C) Soft toe and soft backing bracket
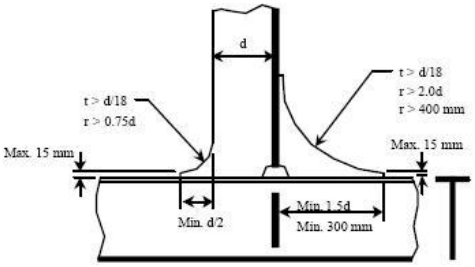
</td></tr>
<tr><td colspan="2">Critical locations</td></tr>
<tr><td colspan="2">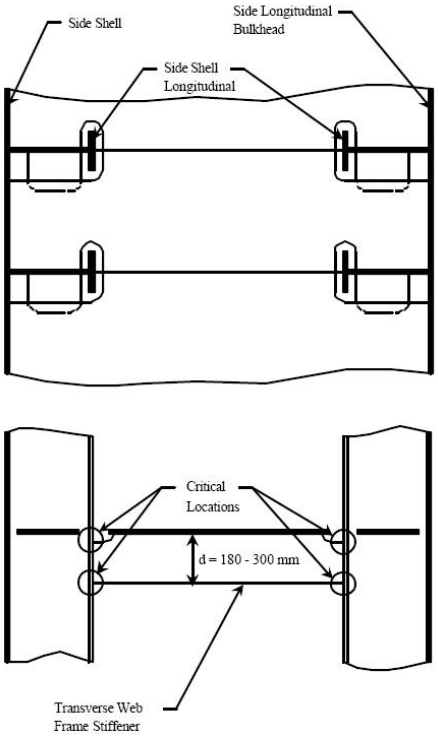
</td></tr>
<tr><td rowspan="3">Structural details</td><td>Applicable structures</td><td>Explanations</td></tr>
<tr><td>Connections of two longitudinals above and four longitudinals below the load waterline to transverse web flat-bar stiffener</td><td>(C) Soft toe and soft backing bracket is to be fitted.</td></tr>
<tr><td>Connections of four longitudinals above and four longitudinals below the ballast waterline to transverse web flat-bar stiffener</td><td>(C) Soft toe and soft backing bracket is to be fitted.</td></tr>
</table>

	Connections of all other longitudinals to transverse web flat-bar stiffener	(B) Soft toe and soft heel is to be fitted.
Building tolerances	Ensure good alignment of the web stiffener, and the web of the side longitudinal.	
Welding requirements	Fillet welding having minimum weld factor of 0.44 (Connection of web stiffeners to face plates of side longitudinals). Ensure start and stop of welding is as far away as practicable from the heels and toes of stiffeners and soft backing brackets. A wraparound weld, with smooth transition and free of weld defects liable to cause stress concentration, i.e. undercuts, notches etc, around the stiffener and soft backing bracket heel and toe connections to the longitudinal face plate. See Section 4, Chapter 1, PART TWO of Rules for Classification of Sea-going Steel Ships for other requirements.	

<table>
<tr><td colspan="3">Structural details of oil tankers</td><td>Table 3</td></tr>
<tr><td colspan="4">Area: Double side
Critical location: Asymmetrical higher tensile steel side longitudinals to transverse web with parallel stiffeners (between the baseline and 0.8D above the baseline)</td></tr>
<tr><td colspan="2">Critical areas</td><td colspan="2">Structural details</td></tr>
<tr><td colspan="2">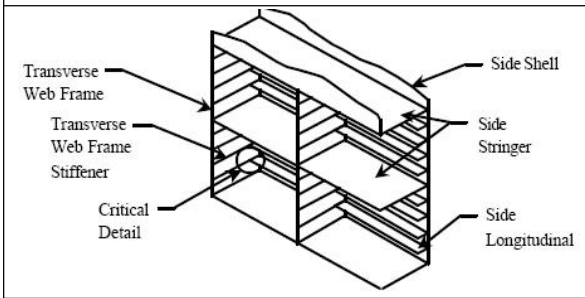
</td><td colspan="2" rowspan="2">(A) Soft heel and soft toe
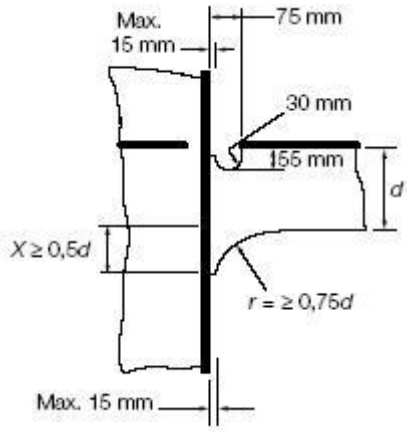

(B) Soft toe and soft backing bracket
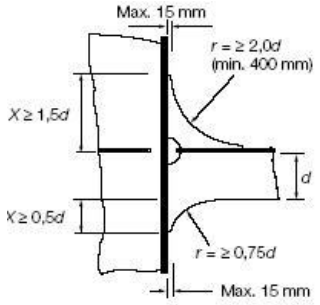

Note: Bracket thickness = Flat bar thickness = d/18 (minimum thickness = 12.0 mm)</td></tr>
<tr><td colspan="2">Critical locations</td></tr>
<tr><td colspan="2">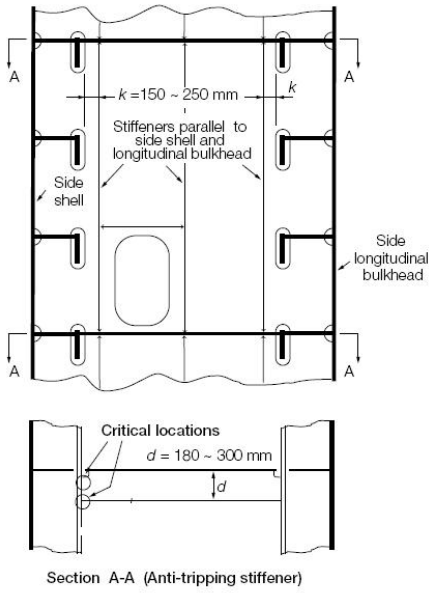
</td></tr>
<tr><td rowspan="2">Structural details</td><td>Applicable structures</td><td colspan="2">Explanations</td></tr>
<tr><td>Connections of asymmetrical side longitudinal to transverse web anti-tripping stiffeners</td><td colspan="2">(B) Soft toe and soft backing bracket is to be fitted.</td></tr>
<tr><td>Building tolerances</td><td colspan="3">Ensure good alignment of the anti-tripping stiffener, the backing bracket and the web of the side longitudinal</td></tr>
<tr><td>Welding requirements</td><td colspan="3">Fillet welding having minimum weld factor of 0.44 (Connection of anti-tripping stiffeners to face plates of side longitudinals. Backing brackets connecting to face plates of side longitudinals). Ensure start and stop of welding is as far away as practicable from the heels and toes of stiffeners and soft backing brackets. A wraparound weld, with smooth transition and free of weld defects liable to cause stress concentration, i.e. undercuts, notches etc, around the anti-tripping stiffener and soft backing bracket heel and toe connections to the longitudinal face plate. See Section 4, Chapter 1, PART TWO of Rules for Classification of Sea-going Steel Ships for other requirements.</td></tr>
</table>

<table>
<tr><td>Structural details of oil tankers</td><td>Table 4</td></tr>
<tr><td colspan="2">Area: Double side
Critical location: Symmetrical higher tensile steel side longitudinals to transverse web with parallel stiffeners (between the baseline and 0.8D above the baseline)</td></tr>
<tr><td>Critical areas</td><td>Structural details</td></tr>
<tr><td>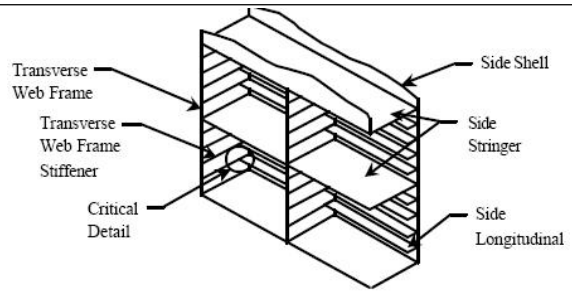

Critical locations
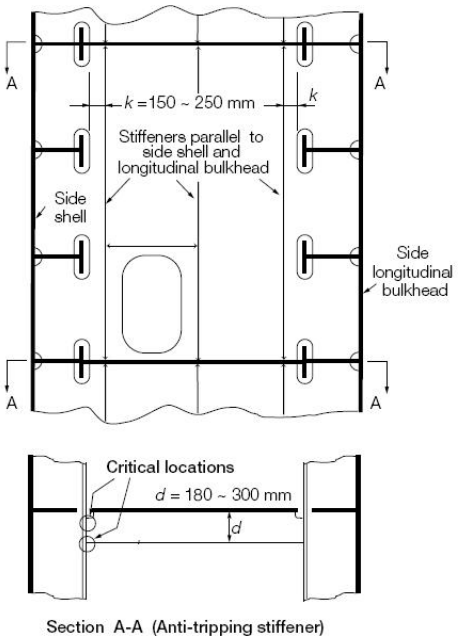

Section A-A (Anti-tripping stiffener)</td><td>(A) Soft heel and soft toe
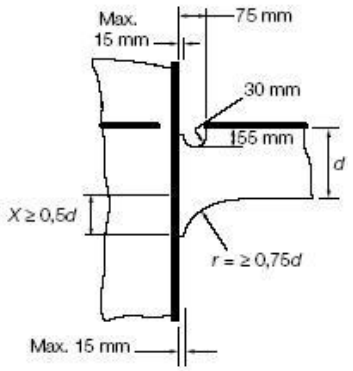

(B) Soft toe and soft backing bracket
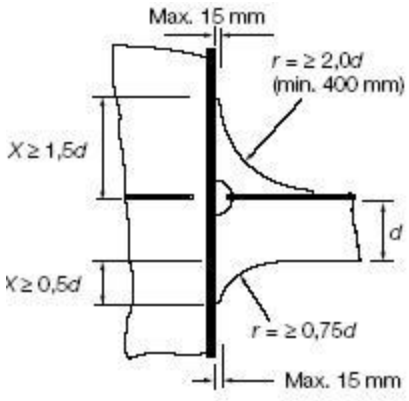

Note: Bracket thickness = Flat bar thickness = d/18 (minimum thickness = 12.0 mm)</td></tr>
<tr><td rowspan="2">Structural details</td><td>Applicable structures</td><td>Explanations</td></tr>
<tr><td>Connections of symmetrical side longitudinal to transverse web anti-tripping stiffeners</td><td>(A) Soft toe and soft heel is to be fitted.</td></tr>
<tr><td>Building tolerances</td><td colspan="2">Ensure good alignment of the anti-tripping stiffener, and the web of the side longitudinal</td></tr>
<tr><td>Welding requirements</td><td colspan="2">Fillet welding having minimum weld factor of 0.44 (Connection of anti-tripping stiffeners to face plates of side longitudinals). Ensure start and stop of welding is as far away as practicable from the heels and toes of stiffeners and soft backing brackets. A wraparound weld, with smooth transition and free of weld defects liable to cause stress concentration, i.e. undercuts, notches etc, around the anti-tripping stiffener and soft backing bracket heel and toe connections to the longitudinal face plate. See Section 4, Chapter 1, PART TWO of Rules for Classification of Sea-going Steel Ships for other requirements.</td></tr>
</table>

Structural details of oil tankers	Table 5

Area: Double side

Critical location: Higher tensile steel side longitudinal connections to watertight transverse web horizontal stiffeners in double side tanks (between the upper turn of bilge and 0.8*D* above the base line)

Critical areas	Structural details
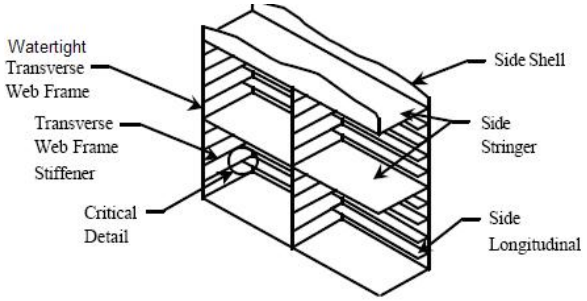	Soft toe and soft backing bracket 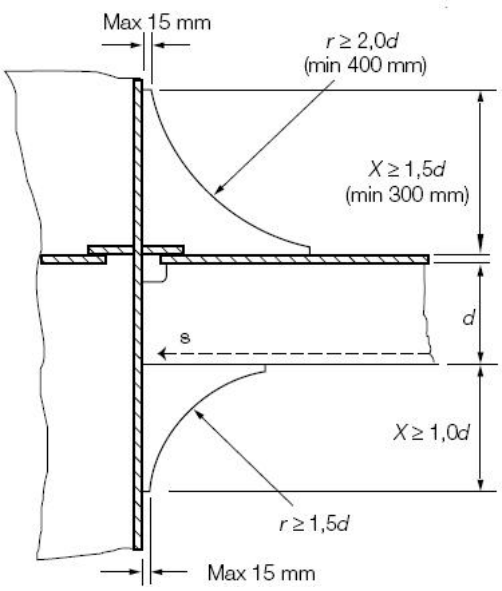
Critical locations	
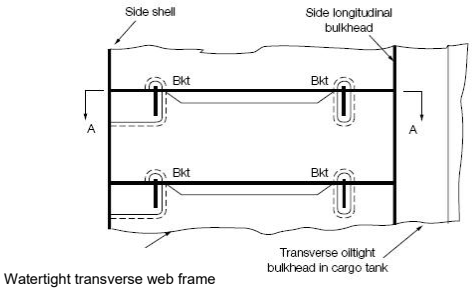 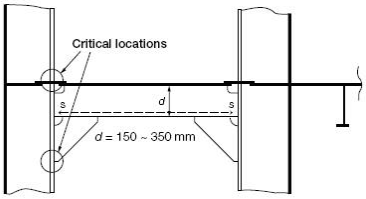	Note: Bracket material = Higher tensile steel Bracket thickness = *d*/22 (Minimum thickness = 12 mm)

	Applicable structures	Explanations
Structural details	Higher tensile steel side longitudinal connections to watertight transverse web horizontal stiffeners in double side tanks	Soft toe and soft backing bracket are to be fitted.
Building tolerances	Ensure good alignment of the web of bulkhead horizontal stiffener, the soft toe brackets and the web of the side longitudinal.	
Welding requirements	Fillet welding having minimum weld factor of 0.34 (Connection of soft toe brackets to face plates of side longitudinals and to webs of horizontal stiffeners). Ensure start and stop of welding is as far away as practicable from the heels and toes of stiffeners and soft backing brackets. A wraparound weld, with smooth transition and free of weld defects liable to cause stress concentration, i.e. undercuts, notches etc, around the heel connections of bulkhead stiffener and the toe connection of brackets to longitudinals. See Section 4, Chapter 1, PART TWO of Rules for Classification of Sea-going Steel Ships for other requirements.	

Structural details of oil tankers	Table 6

Area: Double side

Critical location: Higher tensile steel side longitudinal connections to transverse web stiffeners in way of transverse bulkheads in double side tanks (between the upper turn of bilge and 0.8D above the base line)

Critical areas	Structural details
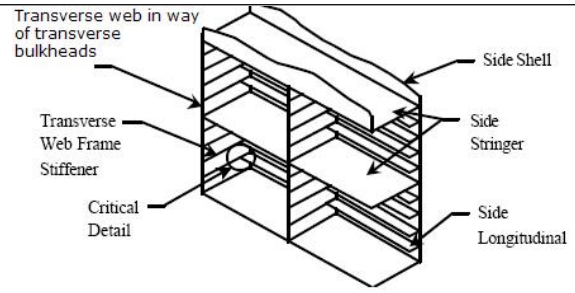	Soft toe and soft backing bracket 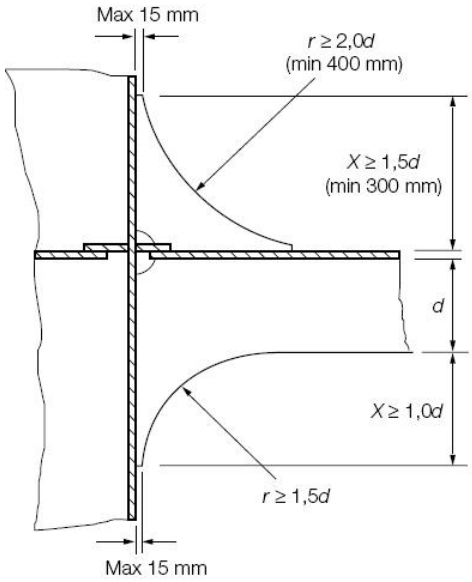
Critical locations	Note: Bracket material = Higher tensile steel Bracket thickness = Flat bar thickness = d/18 (Minimum thickness = 12 mm)
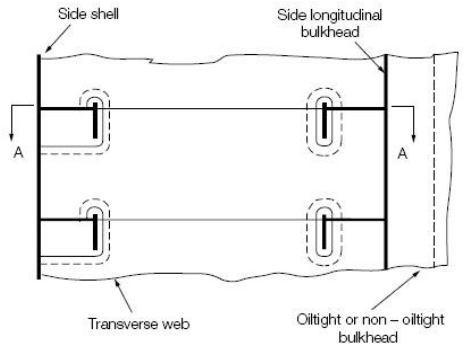 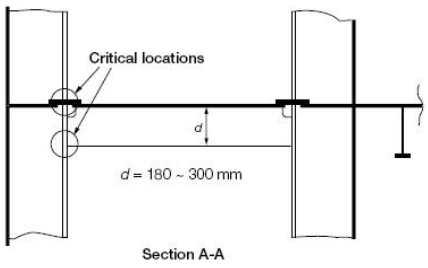	

	Applicable structures	Explanations
Structural details	Connections of side longitudinals to transverse web stiffeners in way of transverse bulkheads in double side tanks	Soft toe and soft backing bracket are to be fitted.
Building tolerances	Ensure good alignment of the stiffener, the backing bracket and the web of the side longitudinal.	
Welding requirements	Fillet welding having minimum weld factor of 0.44 (Connection of web stiffeners to face plates of side longitudinals. Soft toe bracket connections to face plates of side longitudinals). Ensure start and stop of welding is as far away as practicable from the heels and toes of stiffeners and soft backing brackets. A wraparound weld, with smooth transition and free of weld defects liable to cause stress concentration, i.e. undercuts, notches etc, around the heel and toe connections of stiffener and bracket to longitudinal face plate. See Section 4, Chapter 1, PART TWO of Rules for Classification of Sea-going Steel Ships for other requirements.	

Structural details of oil tankers	Table 7

Area: Double bottom

Critical location: Asymmetrical higher tensile steel bottom longitudinals to floor flat-bar stiffeners

Critical areas	Structural details
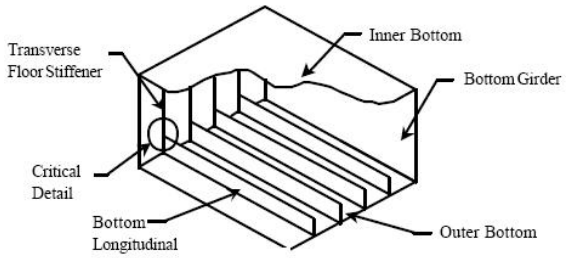	(A) Soft heel 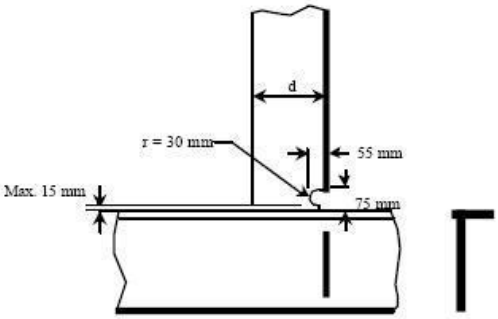
Critical locations	(B) Soft toe and soft heel 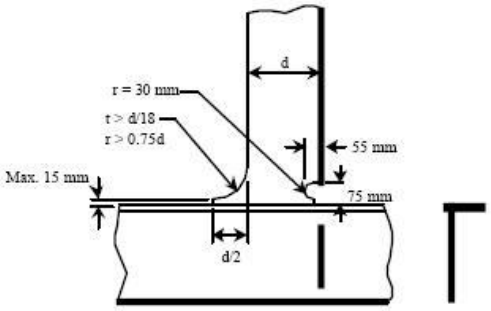
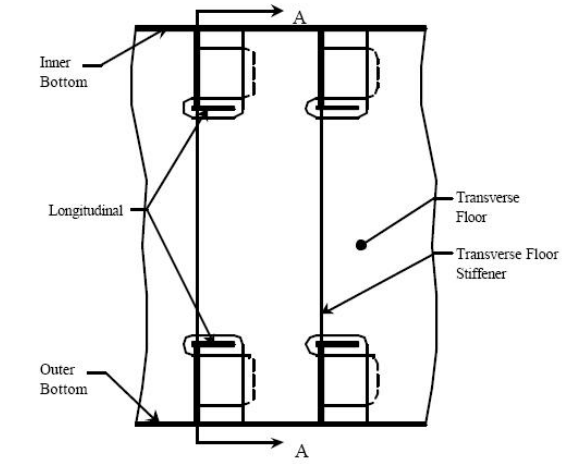 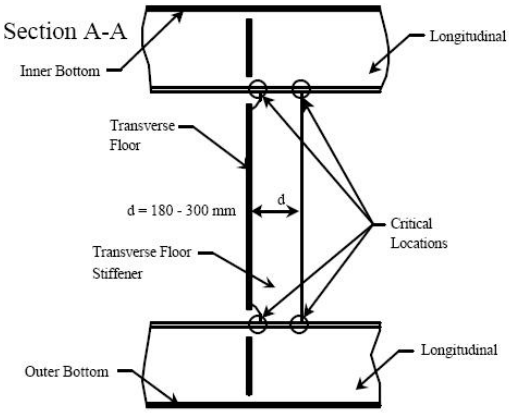	(C) Soft toe and soft backing bracket 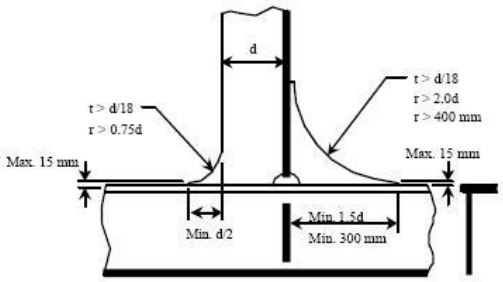

	Applicable structures	Explanations
Structural details	Connections of asymmetrical bottom longitudinals to floor flat-bar stiffeners in way of the double bottom	(B) Soft toe and soft heel is to be fitted.
	Connections of asymmetrical bottom longitudinals to floor flat-bar stiffeners in way of the hopper tank	(C) Soft toe and soft backing bracket is to be fitted.
Building tolerances	Ensure good alignment of the floor stiffener, the backing bracket and the web of the bottom shell longitudinal.	

Welding requirements	Fillet welding having minimum weld factor of 0.44 (Connection of floor stiffeners to face plates of bottom shell longitudinals. Backing bracket connections to face plates of bottom shell longitudinals). A wraparound weld, with smooth transition and free of weld defects liable to cause stress concentration, i.e. undercuts, notches etc, around the heel and toe connections of floor stiffener and backing bracket to longitudinals. See Section 4, Chapter 1, PART TWO of Rules for Classification of Sea-going Steel Ships for other requirements.

<table>
<tr><td>Structural details of oil tankers</td><td>Table 8</td></tr>
<tr><td colspan="2">Area: Double bottom
Critical location: Higher tensile steel bottom shell and inner bottom longitudinal face plate connections at the toe of the end brackets and the heel of the watertight floor stiffeners below plane oil tight transverse bulkhead</td></tr>
<tr><td>Critical areas</td><td>Structural details</td></tr>
<tr><td>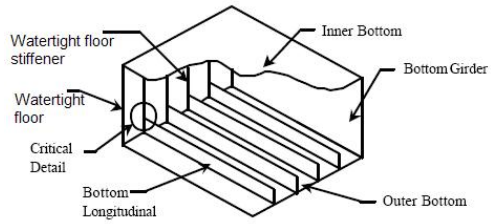
</td><td rowspan="2">Increased floor stiffener depth and symmetrical soft toe brackets
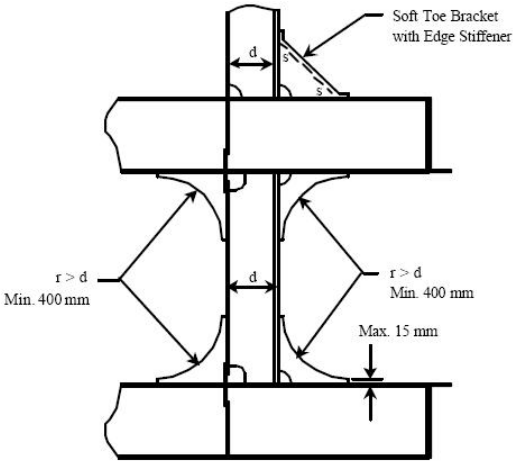

Note: Bracket material = Higher tensile steel
Bracket thickness = d/50 (Minimum thickness = 12.0 mm)</td></tr>
<tr><td>Critical locations</td></tr>
<tr><td>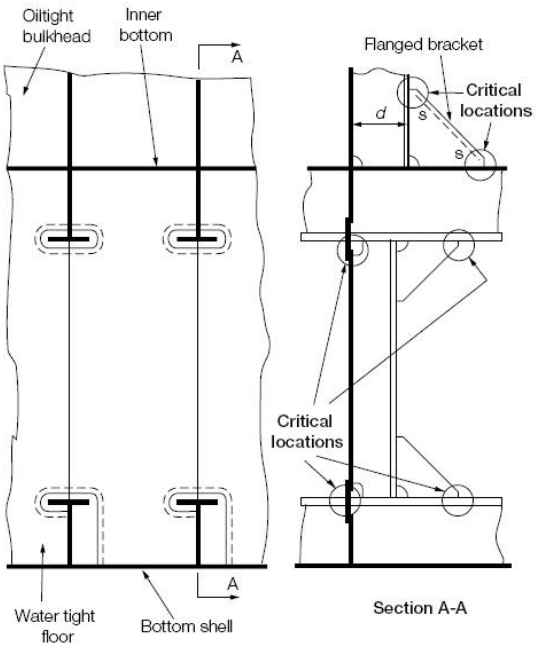
</td></tr>
<tr><td rowspan="2">Structural details</td><td>Applicable structures</td><td>Explanations</td></tr>
<tr><td>Bottom shell and inner bottom longitudinal face plate connections at the toe of the end brackets and the heel of the watertight floor stiffeners below plane oil tight transverse bulkhead</td><td>Increased web depth of the watertight floor stiffeners up to the depth of the oiltight bulkhead vertical stiffener and provision of symmetrical soft toe brackets</td></tr>
<tr><td>Building tolerances</td><td colspan="2">Ensure good alignment of the floor stiffener, the soft toe bracket and the web of the longitudinal.</td></tr>
<tr><td>Welding requirements</td><td colspan="2">Fillet welding having minimum weld factor of 0.34 (Connection of soft toe brackets to face plates of longitudinals and to face plates of watertight floor stiffeners). A wraparound weld, with smooth transition and free of weld defects liable to cause stress concentration, i.e. undercuts, notches etc, around the floor stiffener heel connections to inner and outer bottom shell longitudinals, and the flanged bracket toe connection to inner bottoms and stiffeners. See Section 4, Chapter 1, PART TWO of Rules for Classification of Sea-going Steel Ships for other requirements.</td></tr>
</table>

<table>
<tr><td>Structural details of oil tankers</td><td>Table 9</td></tr>
<tr><td colspan="2">Area: Hopper tank
Critical location: Higher tensile steel side longitudinals and asymmetrical bottom shell longitudinal connections to tripping brackets in way of hopper transverse ring in hopper side tank</td></tr>
<tr><td>Critical areas</td><td>Structural details</td></tr>
<tr><td>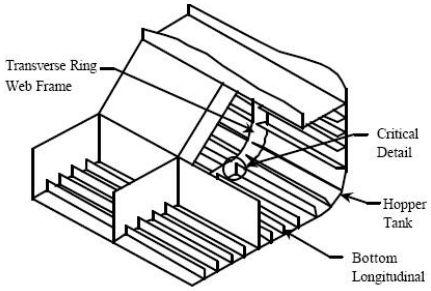
</td><td rowspan="3">(A) Soft heel
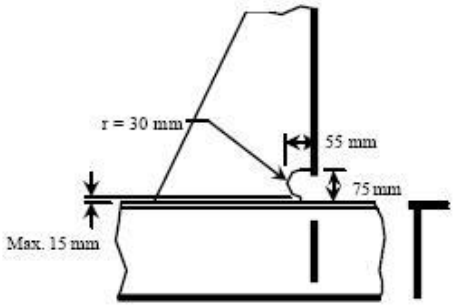

(B) Soft toe and soft heel
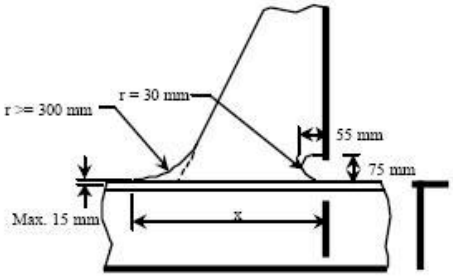

(C) Soft toe and soft backing bracket
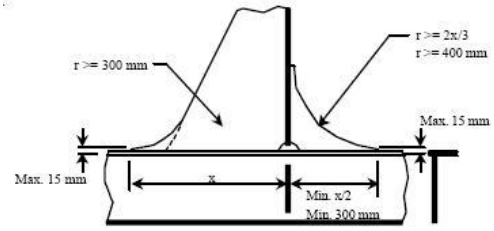

Note:
1. Where the free edge length of tripping bracket is more than 40 times the bracket depth, face plate is to be fitted at free edge to ensure sufficient stability.
2. Edge stiffener to stop away from abutting member at a distance of the order of 50 mm.</td></tr>
<tr><td>Critical locations</td></tr>
<tr><td>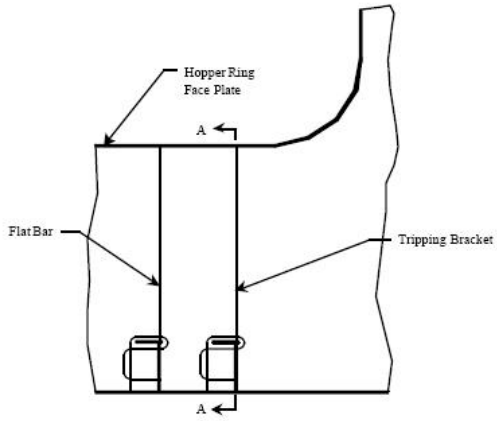

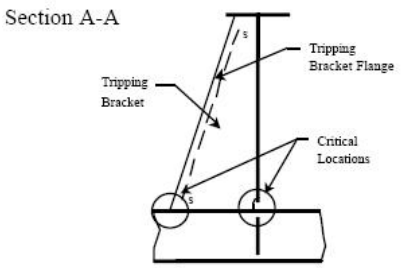
</td></tr>
<tr><td rowspan="2">Structural details</td><td>Applicable structures</td><td>Explanations</td></tr>
<tr><td>Connections of side longitudinals to tripping brackets in way of hopper transverse ring in hopper side tank</td><td>(C) Soft toe and soft backing bracket is to be fitted.</td></tr>
</table>

	Asymmetrical bottom shell longitudinal connections to tripping brackets in way of hopper transverse ring in hopper side tank	(C) Soft toe and soft backing bracket is to be fitted.
Building tolerances	Ensure good alignment of the tripping bracket, the backing bracket and the web of the side longitudinal.	
Welding requirements	Fillet welding having minimum weld factor of 0.3 (Connection of tripping brackets to face plates of side shell longitudinals. Backing bracket connections to face plates of shell longitudinals). A wraparound weld, with smooth transition and free of weld defects liable to cause stress concentration, i.e. undercuts, notches etc, around the heel and toe of the bracket connection to the longitudinal face plate. See Section 4, Chapter 1, PART TWO of Rules for Classification of Sea-going Steel Ships for other requirements.	

<table>
<tr><td>Structural details of oil tankers</td><td>Table 10</td></tr>
<tr><td colspan="2">Area: Hopper tank
Critical location: Hopper sloping plating connections to inner bottom plating in way of floors. Floor connections to inner bottom plating and side girders in way of hopper corners(Hopper corner connections employing welded inner bottom and hopper sloping plating)</td></tr>
<tr><td>Critical areas</td><td>Structural details</td></tr>
<tr><td>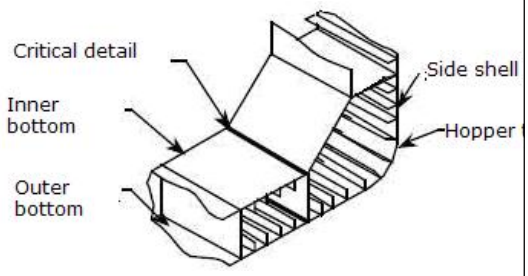
</td><td>Elimination of scallops and extension of inner bottom
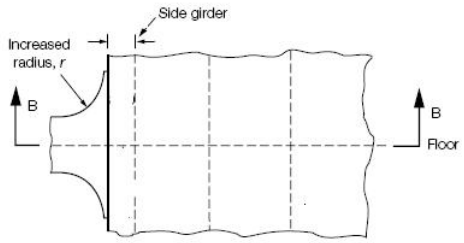
</td></tr>
<tr><td>Critical locations</td><td rowspan="2">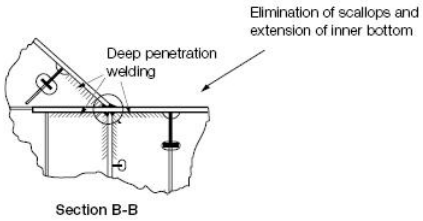

Weld between hopper plating and inner bottom plating to be dressed and ground smooth. Visible undercuts are to be removed.
Extent of dressing both sides of floor.
VLCC 250 mm
Suezmax 200 mm
Aframax 150 mm
Product 100 mm

Note: Grinding need not be applied in the No.1 hold in which floor spans are reduced due to shape.
Grinding need not be applied for the knuckle joints at transverse bulkhead positions, or at the floor adjacent to the transverse bulkhead.</td></tr>
<tr><td>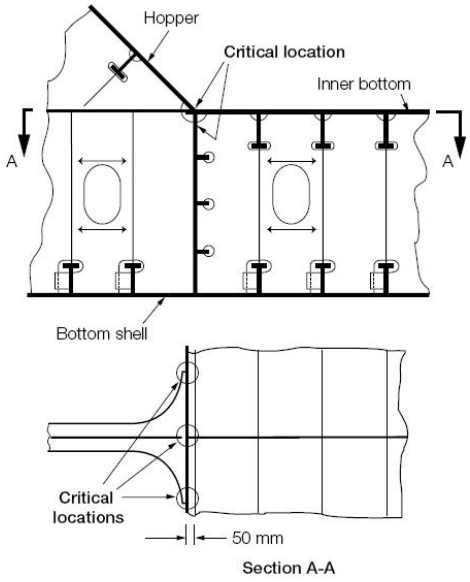
</td></tr>
<tr><td>Structural</td><td>Applicable structures</td><td>Explanations</td></tr>
</table>

details	Hopper sloping plating connections to inner bottom plating in way of floors. Floor connections to inner bottom plating and side girders in way of hopper corners	Elimination of scallops and extension of inner bottom
Building tolerances	The nominal distance between the centres of thickness of the two abutting members is not to exceed 1/3 of the table member thickness.	
Welding requirements	Deep penetration welding and weld dressing (hopper sloping plating to inner bottom plating). Deep penetration weld (connection of floors to inner bottom plating and to side girders, connection of hopper transverse webs to sloping plating, to inner bottom plating, connection of hopper transverse webs to sloping plating, to inner bottom plating and to side girders in way of hopper corners). The weld sequence is to be such as to avoid lamellar tearing. Smooth transition from fillet welds of sloping bottom plating and inner bottom plating to inner bottoms is to be achieved. See Section 4, Chapter 1, PART TWO of Rules for Classification of Sea-going Steel Ships for other requirements.	

<table>
<tr><td colspan="2">Structural details of oil tankers</td><td>Table 11</td></tr>
<tr><td colspan="3">Area: Hopper tankers
Critical location: Side longitudinal bulkhead connections to side stringers, transverse connections to side longitudinal bulkhead and side stringers in way of welded hopper corner transverse webs</td></tr>
<tr><td colspan="2">Critical areas</td><td>Structural details</td></tr>
<tr><td colspan="2">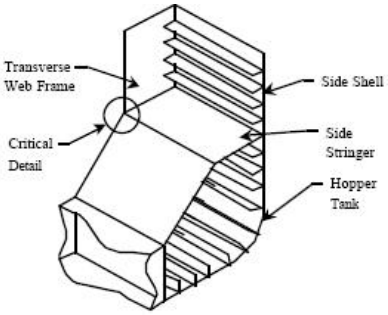
</td><td rowspan="2">Elimination of scallops and addition of transverse brackets
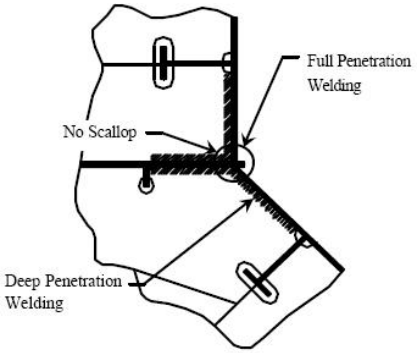

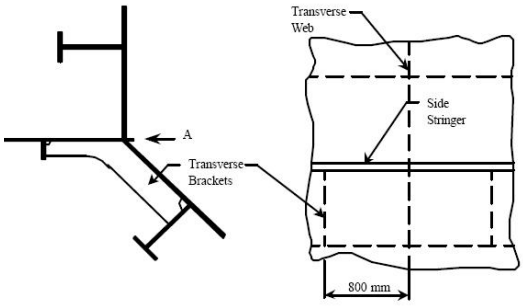
</td></tr>
<tr><td colspan="2">Critical locations</td></tr>
<tr><td colspan="2">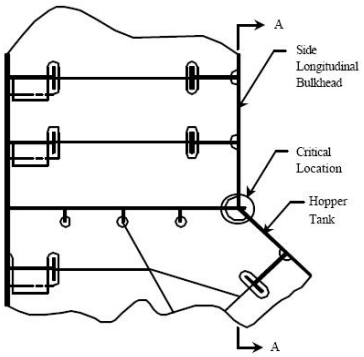

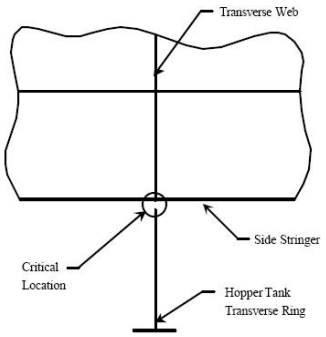
</td></tr>
<tr><td rowspan="2">Structural details</td><td>Applicable structures</td><td>Explanations</td></tr>
<tr><td>Side longitudinal bulkhead connections to side stringers, transverse connections to side longitudinal bulkhead and side stringers in way of welded hopper corner transverse webs</td><td>Elimination of scallops and addition of transverse brackets</td></tr>
<tr><td>Building tolerances</td><td colspan="2">The nominal distance between the centres of thickness of the two abutting members is not to exceed 1/3 of the table member thickness.</td></tr>
<tr><td>Welding requirements</td><td colspan="2">Deep penetration welding (Connection of hopper sloping plating to side longitudinal bulkheads. Connection of side stringers to side longitudinal bulkhead. Connection of transverse webs to side longitudinal bulkhead and to side stringers. Connection of hopper transverse webs to</td></tr>
</table>

	sloping plating, to side longitudinal bulkhead and to side stringers in way of hopper corners). Where Z-direction material is not used in side stringers, it is recommended that the weld sequence is to be such as to avoid lamellar tearing. Small scallops of suitable shape, which are to be closed by welding after completion of the continuous welding of hopper sloping plating and side stringers to longitudinal bulkhead, are to be provided where scallops are eliminated. Smooth transition from welds completed to side stringers is to be achieved. See Section 4, Chapter 1, PART TWO of Rules for Classification of Sea-going Steel Ships for other requirements.

<table>
<tr><td colspan="3">Structural details of oil tankers</td><td>Table 12</td></tr>
<tr><td colspan="4">Area: Hopper tankers
Critical location: Side longitudinal bulkhead connections to side stringers, transverse connections to side longitudinal bulkhead and side stringers in way of knuckled hopper tank corner transverse webs</td></tr>
<tr><td colspan="2">Critical areas</td><td colspan="2">Structural details</td></tr>
<tr><td colspan="2">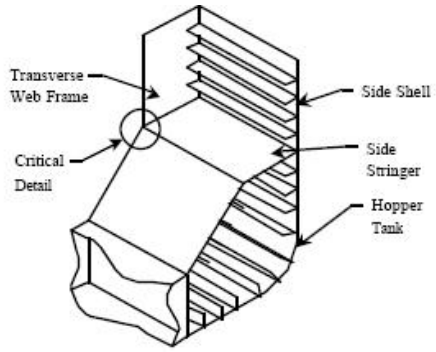
</td><td colspan="2">Elimination of scallops, closer knuckle distance from side girder and additional longitudinal/ transverse brackets
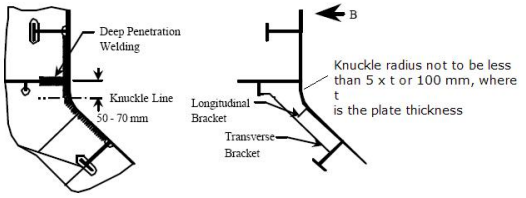
</td></tr>
<tr><td colspan="2">Critical locations</td><td colspan="2">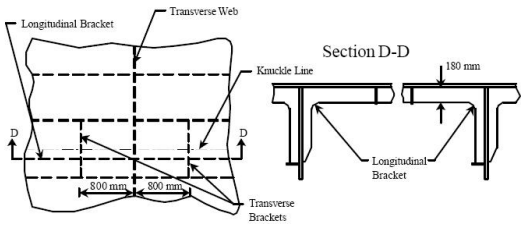
</td></tr>
<tr><td colspan="2">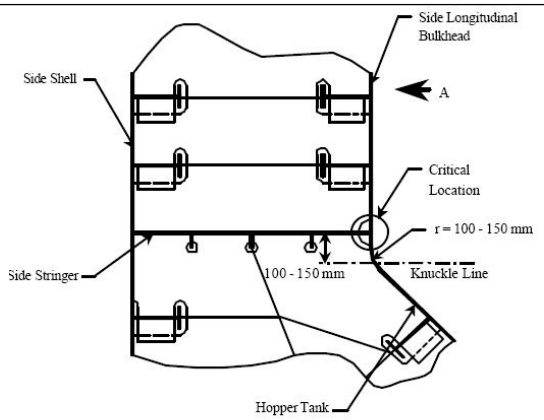
</td><td colspan="2"></td></tr>
<tr><td colspan="2">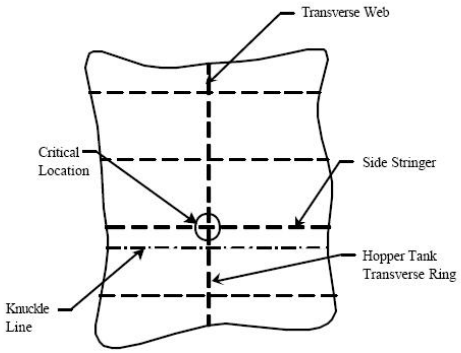
</td><td colspan="2"></td></tr>
<tr><td rowspan="2">Structural details</td><td>Applicable structures</td><td colspan="2">Explanations</td></tr>
<tr><td>Side longitudinal bulkhead connections to side stringers, transverse connections to side longitudinal bulkhead and side stringers in way of knuckled hopper tank corner transverse webs</td><td colspan="2">Elimination of scallops, closer knuckle distance from side girder and additional longitudinal/ transverse brackets</td></tr>
<tr><td>Building tolerances</td><td colspan="3">The nominal distance between the centres of thickness of the two abutting members is not to exceed 1/3 of the table member thickness.</td></tr>
<tr><td>Welding</td><td colspan="3">Deep penetration welding (Connection of side stringers to side longitudinal bulkhead.</td></tr>
</table>

requirements	Connection of double side tank transverse webs to side longitudinal bulkhead and to side stringers. Connection of hopper transverse webs to sloped side longitudinal bulkhead and to side stringers in way of hopper corners). Small scallops of suitable shape, which are to be closed by welding after completion of the continuous welding of side stringers to longitudinal bulkhead, are to be provided where scallops are eliminated. Smooth transition from welds completed to side stringers is to be achieved. See Section 4, Chapter 1, PART TWO of Rules for Classification of Sea-going Steel Ships for other requirements.

<table>
<tr><td colspan="3">Structural details of oil tankers</td><td>Table 13</td></tr>
<tr><td colspan="4">Area: Transverse bulkheads
Critical location: Toe connections of vertical brackets to double bottom girders on plane oil tight transverse bulkhead</td></tr>
<tr><td colspan="2">Critical areas</td><td colspan="2">Structural details</td></tr>
<tr><td colspan="2">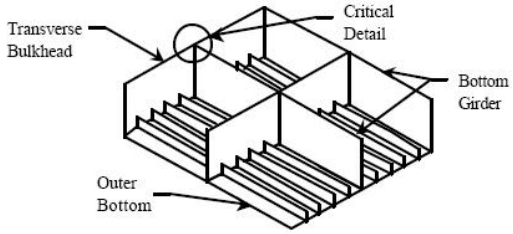
</td><td colspan="2">(A) Soft toe detail with full penetration welding
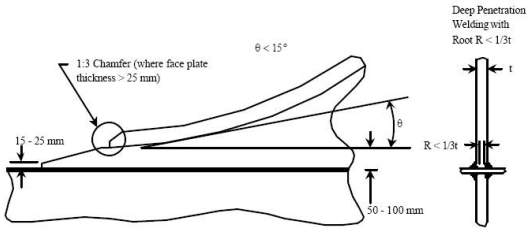
</td></tr>
<tr><td colspan="2">Critical locations</td><td colspan="2">(B) Parallel toe detail with deep penetration welding</td></tr>
<tr><td colspan="2">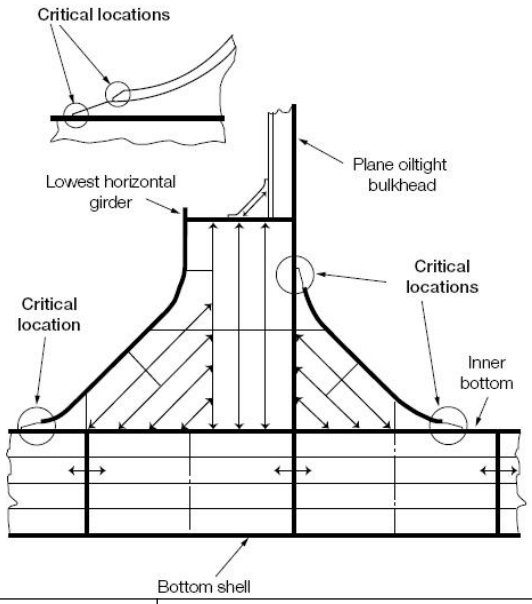
</td><td colspan="2">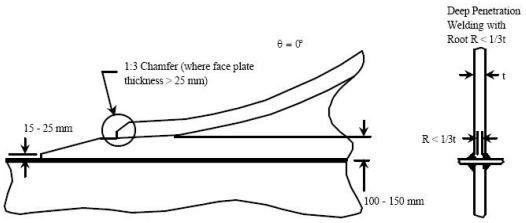
</td></tr>
<tr><td rowspan="2">Structural details</td><td>Applicable structures</td><td colspan="2">Explanations</td></tr>
<tr><td>Toe connections of vertical brackets to double bottom girders on plane oil tight transverse bulkhead</td><td colspan="2">(A) Soft toe detail with full penetration welding, or (B) Parallel toe detail with deep penetration welding is to be fitted.</td></tr>
<tr><td>Building tolerances</td><td colspan="3">The nominal distance between the centres of bracket toe thickness and bottom girder web thickness is not to exceed 1/3 of the inner bottom thickness.</td></tr>
<tr><td>Welding requirements</td><td colspan="3">Deep penetration welding (Connection of bracket toes to inner bottom plating). Deep penetration welding or fillet welding having minimum weld factor of 0.44 (Connection of double bottom girder webs in way of bracket toes to inner bottom plating). The extent of full penetration is to be as required by the designer, or as agreed with the Plan Approval Surveyor. A wraparound weld, with smooth transition and free of weld defects liable to cause stress concentration, i.e. undercuts, notches etc, in way of bracket toe connections to the inner bottom plating. See Section 4, Chapter 1, PART TWO of Rules for Classification of Sea-going Steel Ships for other requirements.</td></tr>
</table>

Structural details of oil tankers	Table 14

Area: Transverse bulkheads

Critical location: Toe connections of vertical web end brackets to double bottom girders on corrugated transverse oil tight bulkheads

Critical areas	Structural details
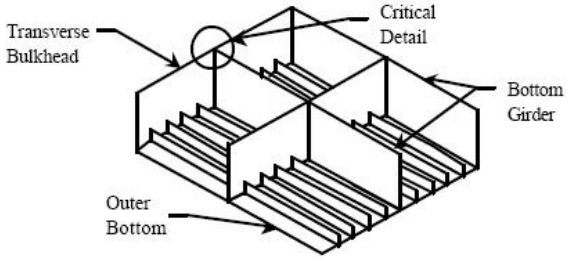	(A) Soft toe detail with full penetration welding 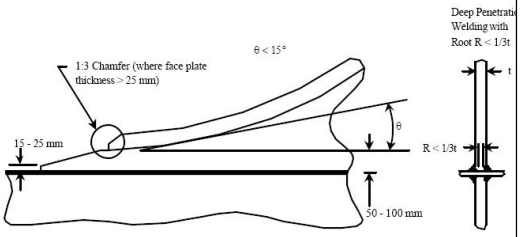
Critical locations	
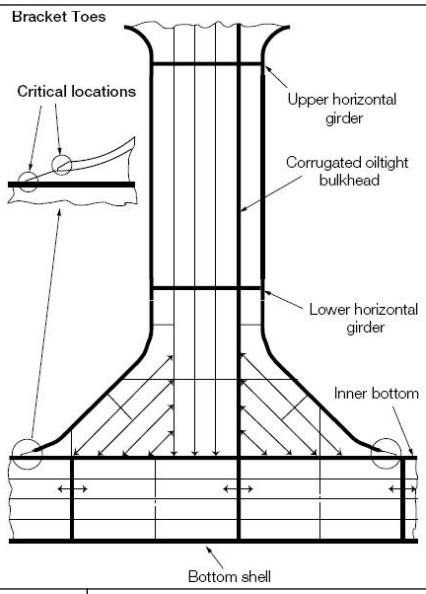	(B) Parallel toe detail with deep penetration welding 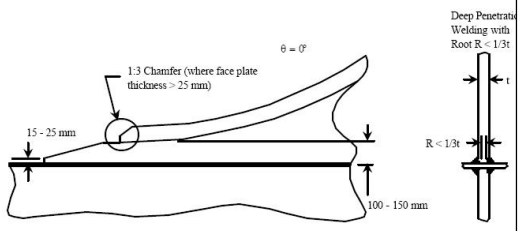

	Applicable structures	Explanations
Structural details	Toe connections of vertical web end brackets to double bottom girders on corrugated transverse oil tight bulkheads	(A) Soft toe detail with full penetration welding, or (B) Parallel toe detail with deep penetration welding is to be fitted.
Building tolerances	The nominal distance between the centres of bracket toe thickness and bottom girder web thickness is not to exceed 1/3 of the inner bottom thickness.	
Welding requirements	Deep penetration welding (Connection of bracket toes to inner bottom plating). Deep penetration welding or fillet welding having minimum weld factor of 0.44 (Connection of double bottom girder webs in way of bracket toes to inner bottom plating). The extent of full penetration is to be as required by the designer, or as agreed with the Plan Approval Surveyor. A wraparound weld, with smooth transition and free of weld defects liable to cause stress concentration, i.e. undercuts, notches etc, in way of bracket toe connections to the inner bottom plating. See Section 4, Chapter 1, PART TWO of Rules for Classification of Sea-going Steel Ships for other requirements.	

<table>
<tr><td colspan="3">Structural details of oil tankers</td><td>Table 15</td></tr>
<tr><td colspan="4">Area: Transverse bulkheads
Critical location: Toe connections of vertical stiffener end brackets to bottom girders in double bottom tanks and vertical stiffeners on plane oil tight transverse bulkheads</td></tr>
<tr><td colspan="2">Critical areas</td><td colspan="2">Structural details</td></tr>
<tr><td colspan="2">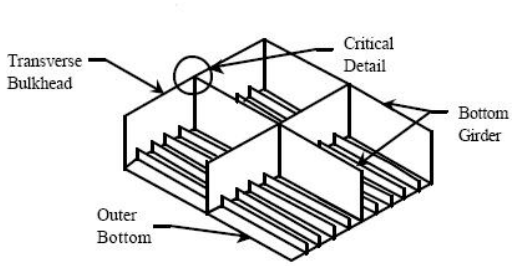
</td><td colspan="2">Integral soft toe bracket
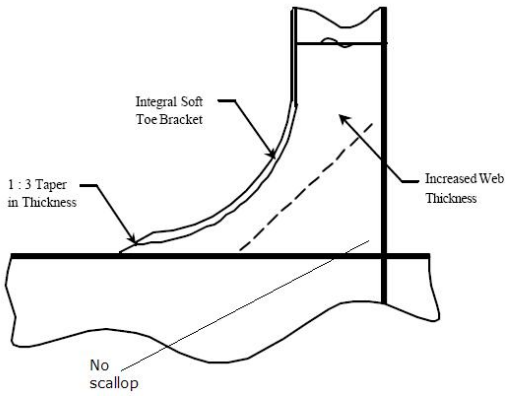
</td></tr>
<tr><td colspan="2">Critical locations</td><td colspan="2"></td></tr>
<tr><td colspan="2">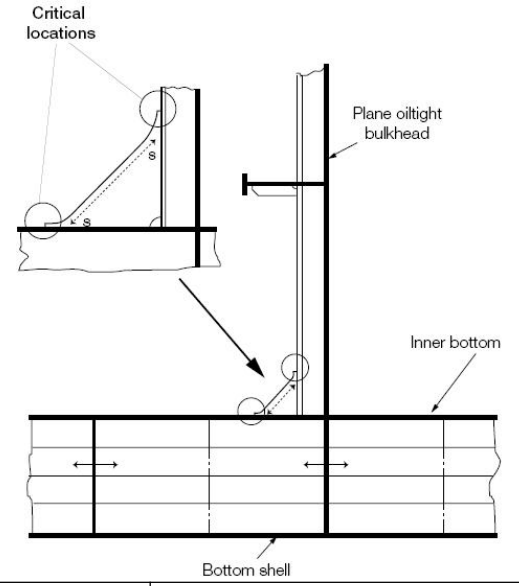
</td><td colspan="2"></td></tr>
<tr><td rowspan="2"></td><td>Applicable structures</td><td colspan="2">Explanations</td></tr>
<tr><td>Toe connections of vertical stiffener end brackets to bottom girders in double bottom tanks and vertical stiffeners on plane oil tight transverse bulkheads</td><td colspan="2">Integral soft toe bracket is to be fitted.</td></tr>
<tr><td>Building tolerances</td><td colspan="3">The nominal distance between the centres of bracket toe thickness and bottom girder web thickness is not to exceed 1/3 of the inner bottom thickness.</td></tr>
<tr><td>Welding requirements</td><td colspan="3">Fillet welding having minimum weld factor of 0.44 (Connection of end brackets to inner bottom plating). A wraparound weld, with smooth transition and free of weld defects liable to cause stress concentration, i.e. undercuts, notches etc, around the bracket toe connection to the inner bottom and the vertical stiffener. A small scallop of suitable shape, which is to be closed by welding after completion of the continuous welding of bulkhead, is to be provided where scallop is eliminated. See Section 4, Chapter 1, PART TWO of Rules for Classification of Sea-going Steel Ships for other requirements.</td></tr>
</table>

<table>
<tr><td colspan="3">Structural details of oil tankers</td><td>Table 16</td></tr>
<tr><td colspan="4">Area: Transverse bulkheads
Critical location: Toe connection of horizontal girder end brackets to side stringers on plane oil tight transverse bulkheads. Intersections of webs of horizontal girders and side stringers forming square corners</td></tr>
<tr><td colspan="2">Critical areas</td><td colspan="2">Structural details</td></tr>
<tr><td colspan="2">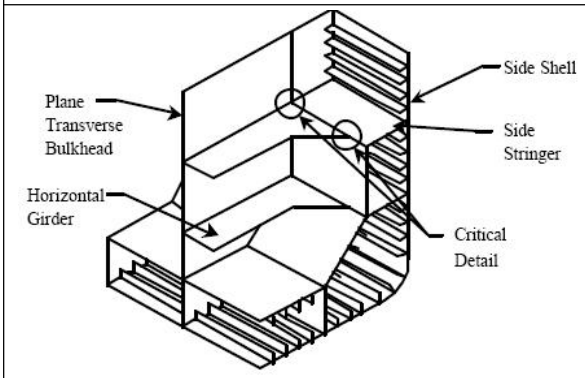
</td><td colspan="2" rowspan="2">(A) Soft toe detail with full penetration welding
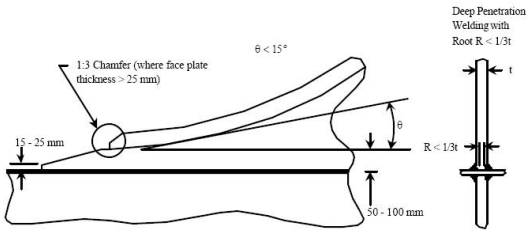

(B) Parallel toe detail with deep penetration welding
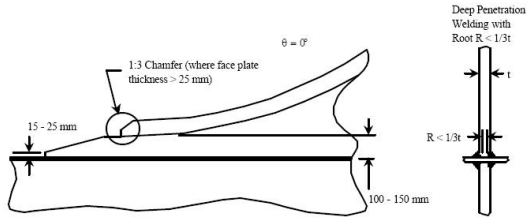

(C) Elimination of scallops and fitting of a localised ‘D’ grade steel insert plate
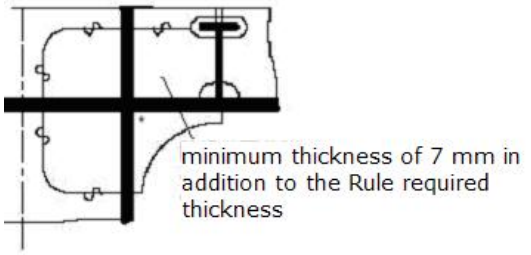
</td></tr>
<tr><td colspan="2">Critical locations</td></tr>
<tr><td colspan="2">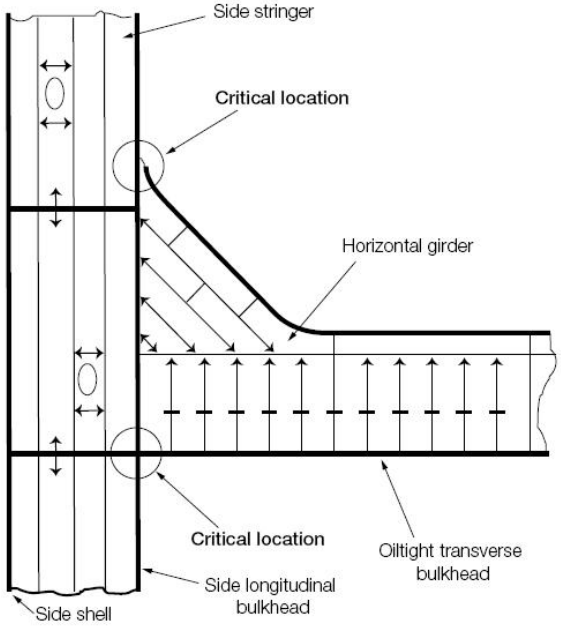
</td></tr>
<tr><td rowspan="3">Structural details</td><td>Applicable structures</td><td colspan="2">Explanations</td></tr>
<tr><td>Toe connection of horizontal girder end brackets to side stringers on plane oil tight transverse bulkheads</td><td colspan="2">(A) Soft toe detail with full penetration welding, or
(B) Parallel toe detail with deep penetration welding</td></tr>
<tr><td>Intersections of webs of horizontal girders and side stringers forming square corners</td><td colspan="2">(C) Elimination of scallops and fitting of a localised ‘D’ grade steel insert plate</td></tr>
<tr><td>Building tolerances</td><td colspan="3">The nominal distance between the centres of thickness of the two abutting members is not to exceed 1/3 of the table member thickness</td></tr>
<tr><td>Welding requirements</td><td colspan="3">Deep penetration welding (Connection of bracket toes to side stringers). Fillet welding having minimum weld factor of 0.44 (Side stringer webs in way of bracket toes and square corners). The extent of full penetration is to be as required by the designer, or as agreed with the Plan Approval Surveyor. A wraparound weld, with smooth transition and free of weld defects liable</td></tr>
</table>

	to cause stress concentration, i.e. undercuts, notches etc, around toe connections of horizontal girder end brackets to side longitudinal bulkheads. A small scallop of suitable shape, which is to be closed by welding after completion of the continuous welding of bulkhead, is to be provided where scallop is eliminated. See Section 4, Chapter 1, PART TWO of Rules for Classification of Sea-going Steel Ships for other requirements.

<table>
<tr><td colspan="3">Structural details of oil tankers</td><td>Table 17</td></tr>
<tr><td colspan="4">Area: Transverse bulkheads
Critical location: Toe connection of horizontal girder end brackets to side stringers on corrugated oil tight transverse bulkheads</td></tr>
<tr><td colspan="2">Critical areas</td><td colspan="2">Structural details</td></tr>
<tr><td colspan="2">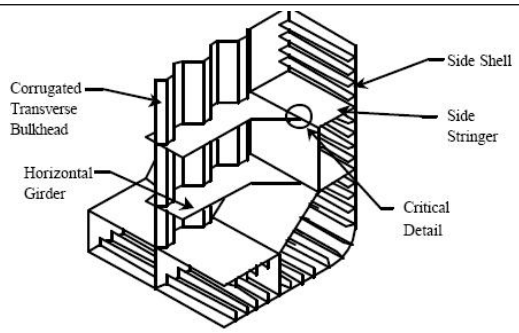
</td><td colspan="2">(A) Soft toe detail with full penetration welding
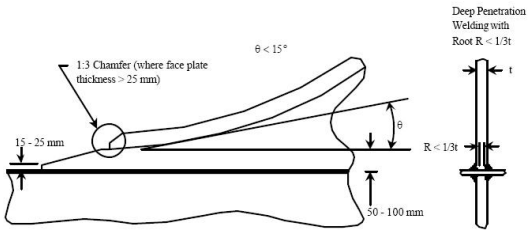
</td></tr>
<tr><td colspan="2">Critical locations</td><td colspan="2">(B) Parallel toe detail with deep penetration welding
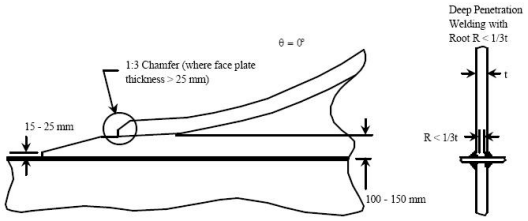
</td></tr>
<tr><td colspan="2">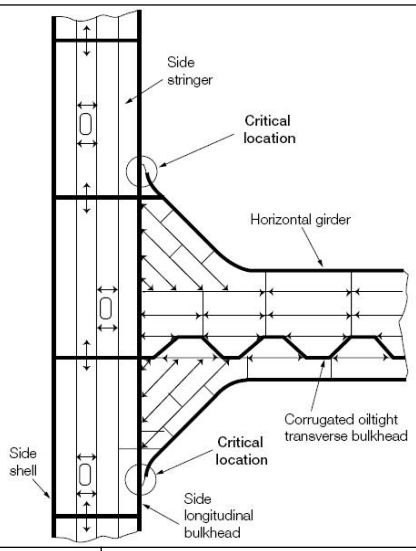
</td><td colspan="2"></td></tr>
<tr><td rowspan="2">Structural details</td><td>Applicable structures</td><td colspan="2">Explanations</td></tr>
<tr><td>Toe connection of horizontal girder end brackets to side stringers on corrugated oil tight transverse bulkheads</td><td colspan="2">(A) Soft toe detail with full penetration welding, or
(B) Parallel toe detail with deep penetration welding</td></tr>
<tr><td>Building tolerances</td><td colspan="3">The nominal distance between the centres of bracket toe thickness and side stringer web thickness is not to exceed 1/3 of side longitudinal bulkhead thickness.</td></tr>
<tr><td>Welding requirements</td><td colspan="3">Deep penetration welding (Connection of bracket toes to side longitudinal bulkheads). Fillet welding having minimum weld factor of 0.44 (Connections of side stringer webs in way of bracket toes to side longitudinal bulkheads). The extent of full penetration is to be as required by the designer, or as agreed with the Plan Approval Surveyor. A wraparound weld, with smooth transition and free of weld defects liable to cause stress concentration, i.e. undercuts, notches etc, around toe connections of horizontal girder end brackets to side longitudinal bulkheads. See Section 4, Chapter 1, PART TWO of Rules for Classification of Sea-going Steel Ships for other requirements.</td></tr>
</table>

<table>
<tr><td colspan="3">Structural details of oil tankers</td><td>Table 18</td></tr>
<tr><td colspan="4">Area: Wing cargo tanks
Critical location: Toe connections of cross-tie end brackets to transverse webs in double side tanks (cross-ties in wing cargo tanks).</td></tr>
<tr><td colspan="2">Critical areas</td><td colspan="2">Structural details</td></tr>
<tr><td colspan="2">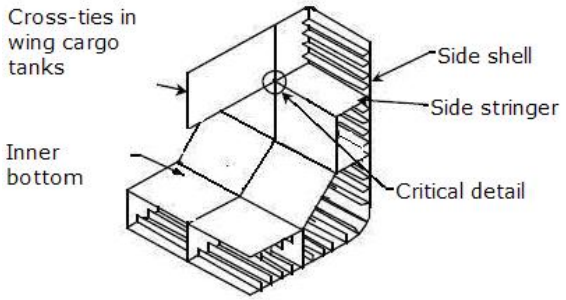
</td><td colspan="2">(A) Soft toe detail with full penetration welding
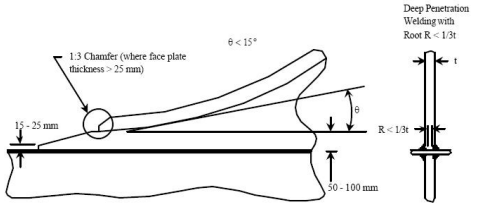
</td></tr>
<tr><td colspan="2">Critical locations</td><td colspan="2">(B) Parallel toe detail with deep penetration welding
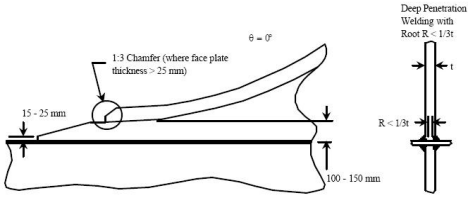
</td></tr>
<tr><td colspan="2">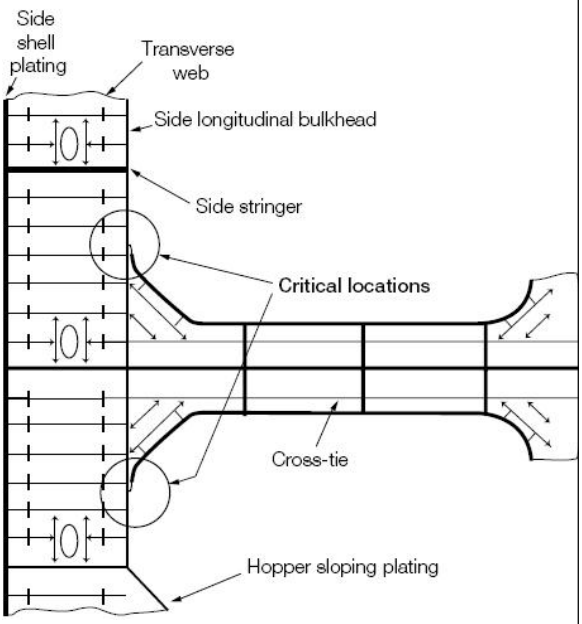
</td><td colspan="2">(C) Elimination of scallops and fitting of slit type collars
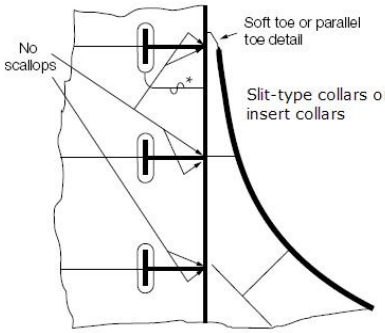
</td></tr>
<tr><td rowspan="2">Structural details</td><td>Applicable structures</td><td colspan="2">Explanations</td></tr>
<tr><td>Toe connections of cross-tie end brackets to transverse webs in double side tanks</td><td colspan="2">(A) Soft toe detail with full penetration welding, or (B) Parallel toe detail with deep penetration welding is to be fitted. (C) Elimination of scallops and fitting of slit type collars.</td></tr>
<tr><td>Building tolerances</td><td colspan="3">The nominal distance between the centres of bracket toe thickness and transverse web thickness is not to exceed 1/3 of side longitudinal bulkhead thickness.</td></tr>
<tr><td>Welding requirements</td><td colspan="3">Deep penetration welding (Connection of bracket toes to side longitudinal bulkhead). Fillet welding having minimum weld factor of 0.44 (Connection of transverse webs in way of bracket toes to side longitudinal bulkhead). The extent of full penetration is to be as required by the designer, or as agreed with the Plan Approval Surveyor. A wraparound weld, with smooth transition and free of weld defects liable to cause stress concentration, i.e. undercuts, notches etc, around toe connections of cross-tie end brackets to side longitudinal bulkheads. Small scallops of suitable shape, which are to be closed by welding after completion of the continuous</td></tr>
</table>

	welding of longitudinal bulkhead stiffeners to longitudinal bulkhead, are to be provided where scallops are eliminated. Full penetration welding is to be carried out in way of * as marked in the Figure above using slit type collars or insert collars of the same material and thickness, replacing fillet welding using lapped collars. See Section 4, Chapter 1, PART TWO of Rules for Classification of Sea-going Steel Ships for other requirements.

<table>
<tr><td colspan="3">Structural details of oil tankers</td><td>Table 19</td></tr>
<tr><td colspan="4">Area: Wing cargo tanks
Critical location: Toe connections of transverse swash bulkhead end brackets to transverse webs in double side tanks (cross-ties in centre cargo tanks).</td></tr>
<tr><td colspan="2">Critical areas</td><td colspan="2">Structural details</td></tr>
<tr><td colspan="2">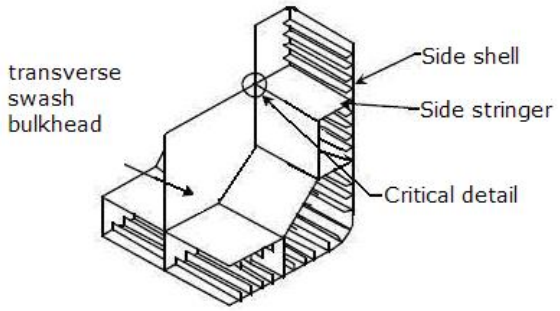
</td><td colspan="2">(A) Soft toe detail with full penetration welding
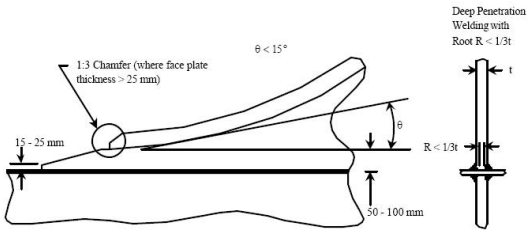
</td></tr>
<tr><td colspan="2">Critical locations</td><td colspan="2">(B) Parallel toe detail with deep penetration welding
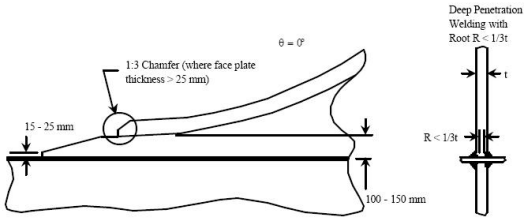
</td></tr>
<tr><td colspan="2">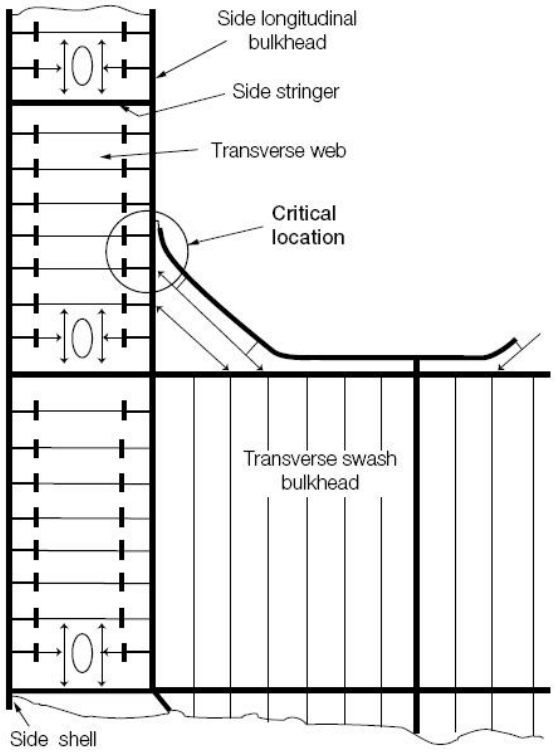
</td><td colspan="2">(C) Elimination of scallops and fitting of slit type collars
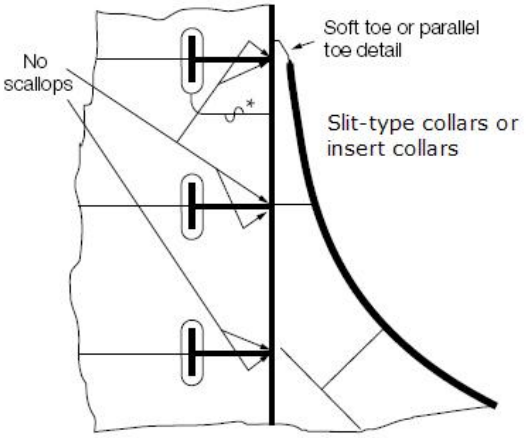
</td></tr>
<tr><td rowspan="2">Structural details</td><td>Applicable structures</td><td colspan="2">Explanations</td></tr>
<tr><td>Toe connections of transverse swash bulkhead end brackets to transverse webs in double side tanks</td><td colspan="2">(A) Soft toe detail with full penetration welding, or (B) Parallel toe detail with deep penetration welding is to be fitted. (C) Elimination of scallops and fitting of slit type collars.</td></tr>
<tr><td>Building tolerances</td><td colspan="3">The nominal distance between the centres of bracket toe thickness and transverse web thickness is not to exceed 1/3 of side longitudinal bulkhead thickness.</td></tr>
<tr><td>Welding requirements</td><td colspan="3">Deep penetration welding (Connection of bracket toes to side longitudinal bulkhead). Fillet welding having minimum weld factor of 0.44 (Connection of transverse webs in way of bracket toes to side longitudinal bulkhead). The extent of full penetration is to be as required by the</td></tr>
</table>

	designer, or as agreed with the Plan Approval Surveyor. A wraparound weld, with smooth transition and free of weld defects liable to cause stress concentration, i.e. undercuts, notches etc, around toe connections of transverse swash bulkhead end brackets to side longitudinal bulkheads. Small scallops of suitable shape, which are to be closed by welding after completion of the continuous welding of longitudinal bulkhead stiffeners to longitudinal bulkhead, are to be provided where scallops are eliminated. Full penetration welding is to be carried out in way of * as marked in the Figure above using slit type collars or insert collars of the same material and thickness, replacing fillet welding using lapped collars. See Section 4, Chapter 1, PART TWO of Rules for Classification of Sea-going Steel Ships for other requirements.

Structural details of oil tankers	Table 20

Area: Longitudinal bulkheads

Critical location: Toe connections of vertical web end brackets to floors in double bottom tanks on longitudinal bulkheads

Critical areas	Structural details
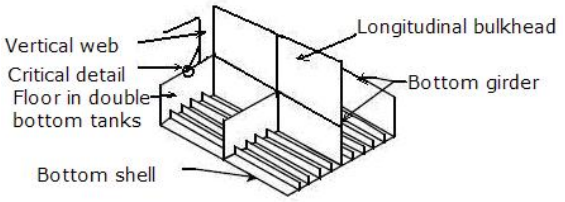	(A) Soft toe detail with full penetration welding 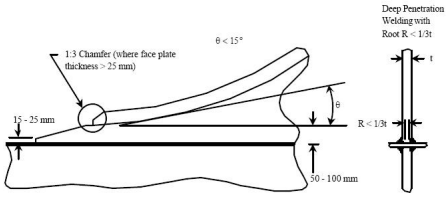
Critical locations	(B) Parallel toe detail with deep penetration welding 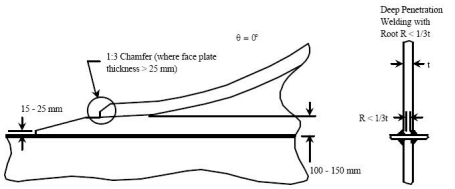
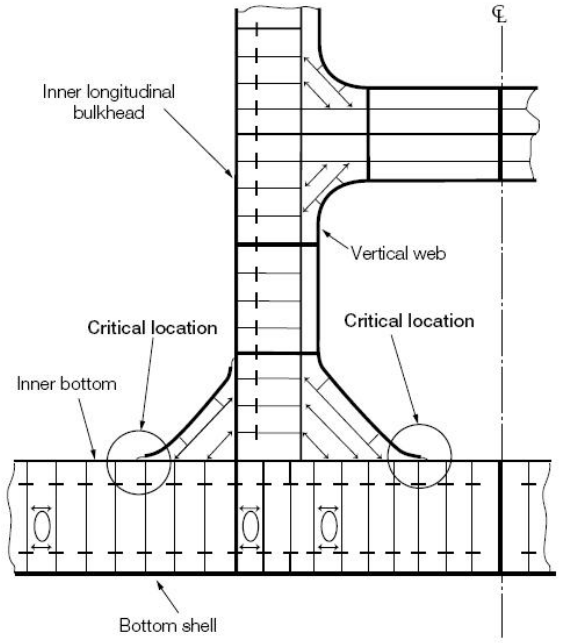	(C) Elimination of scallops and fitting of slit type collars 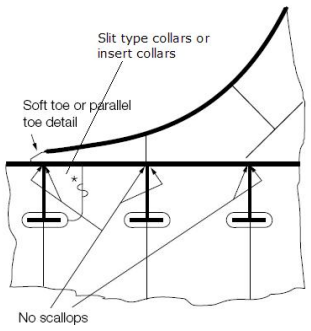

	Applicable structures	Explanations
Structural details	Toe connections of vertical web end brackets to floors in double bottom tanks on longitudinal bulkheads	(A) Soft toe detail with full penetration welding, or (B) Parallel toe detail with deep penetration welding is to be fitted. (C) Elimination of scallops and fitting of slit type collars.
Building tolerances	The nominal distance between the centres of bracket toe thickness and floor thickness is not to exceed 1/3 of inner bottom plating thickness.	
Welding requirements	Deep penetration welding (Connection of bracket toes to inner bottom plating). Fillet welding having minimum weld factor of 0.44 (Connection of floors in way of bracket toes to inner bottom plating). The extent of full penetration is to be as required by the designer, or as agreed with the Plan Approval Surveyor. A wraparound weld, with smooth transition and free of weld defects liable to cause stress concentration, i.e. undercuts, notches etc, around toe connections of vertical web end brackets to inner bottom plating. Small scallops of suitable shape, which are to be closed by welding after completion of the continuous welding of inner bottom longitudinals	

	to inner bottom plating, are to be provided where scallops are eliminated. Full penetration welding is to be carried out in way of * as marked in the Figure above using slit type collars or insert collars of the same material and thickness, replacing fillet welding using lapped collars. See Section 4, Chapter 1, PART TWO of Rules for Classification of Sea-going Steel Ships for other requirements.

<table>
<tr><td colspan="3">Structural details of oil tankers</td><td>Table 21</td></tr>
<tr><td colspan="4">Area: Longitudinal bulkheads
Critical location: Toe connections of centreline vertical web end brackets to floors in double bottom tanks. Connections of lowest strake of centreline bulkhead and inner bottom plating. Connections of double bottom centre girder to inner bottom plating.</td></tr>
<tr><td colspan="2">Critical areas</td><td colspan="2">Structural details</td></tr>
<tr><td colspan="2">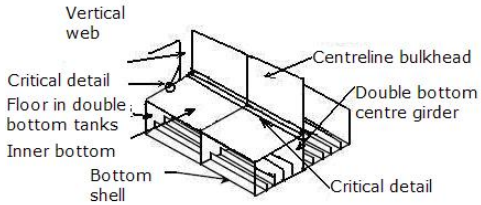
</td><td colspan="2">(A) Soft toe detail with full penetration welding
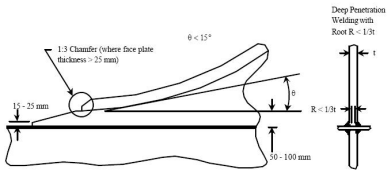
</td></tr>
<tr><td colspan="2">Critical locations</td><td colspan="2" rowspan="2">(B) Parallel toe detail with deep penetration welding
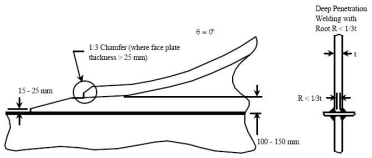

(C) Deep penetration welding or fillet welding
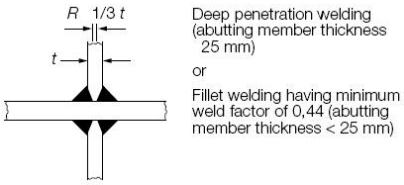
</td></tr>
<tr><td colspan="2">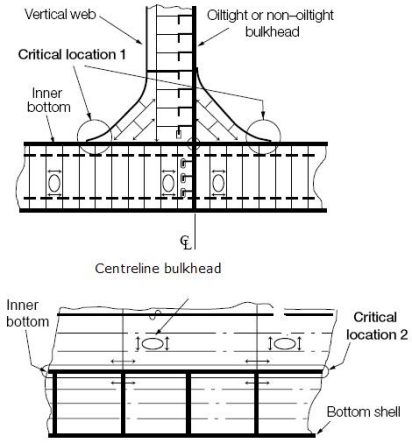
</td></tr>
<tr><td rowspan="3">Structural details</td><td>Applicable structures</td><td colspan="2">Explanations</td></tr>
<tr><td>Toe connections of centreline vertical web end brackets to floors in double bottom tanks (LOCATION 1).</td><td colspan="2">(A) Soft toe detail with full penetration welding, or (B) Parallel toe detail with deep penetration welding is to be fitted.</td></tr>
<tr><td>Connections of lowest strake of centreline bulkhead and inner bottom plating. Connections of double bottom centre girder to inner bottom plating (LOCATION 2).</td><td colspan="2">(C) Deep penetration welding or fillet welding</td></tr>
<tr><td>Building tolerances</td><td colspan="3">The nominal distance between the centres of thickness of the two abutting members is not to exceed 1/3 of the table member thickness (LOCATION 1 and LOCATION 2).</td></tr>
<tr><td>Welding requirements</td><td colspan="3">Deep penetration welding (Connection of bracket toes in LOCATION 1 and where abutting member thickness ≥25 mm in LOCATION 1). Fillet welding having minimum weld factor of 0.44 (Connection of floors in way of bracket toes in LOCATION 1 and where abutting member thickness <25 mm in LOCATION 2). The extent of full penetration is to be as required by the designer, or as agreed with the Plan Approval Surveyor. A wraparound weld, with smooth transition and free of weld defects liable to cause stress concentration, i.e. undercuts, notches etc, around toe connections of vertical web end brackets to inner bottom plating. Small scallops of suitable shape, which are to be closed by welding after completion of the continuous welding</td></tr>
</table>

	of inner bottom longitudinals to inner bottom plating, are to be provided where scallops are eliminated. Full penetration welding is to be carried out in way of * as marked in the Figure above using slit type collars or insert collars of the same material and thickness, replacing fillet welding using lapped collars. See Section 4, Chapter 1, PART TWO of Rules for Classification of Sea-going Steel Ships for other requirements.

<table>
<tr><td colspan="3">Structural details of oil tankers</td><td>Table 22</td></tr>
<tr><td colspan="4">Area: Deck
Critical location: Toe connections of deck transverse end brackets to transverse webs in double side tanks (cross-ties in centre cargo tanks or wing cargo tanks).</td></tr>
<tr><td colspan="2">Critical areas</td><td colspan="2">Structural details</td></tr>
<tr><td colspan="2">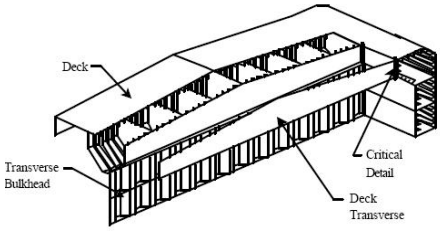
</td><td colspan="2">(A) Soft toe detail with full penetration welding
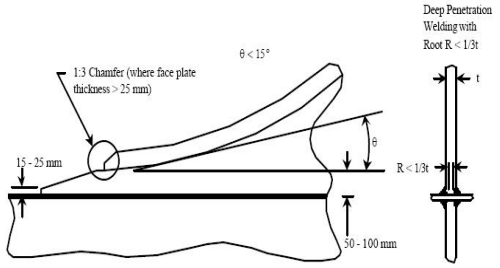
</td></tr>
<tr><td colspan="2">Critical locations</td><td colspan="2">(B) Parallel toe detail with deep penetration welding
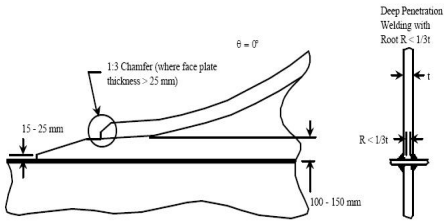
</td></tr>
<tr><td colspan="2">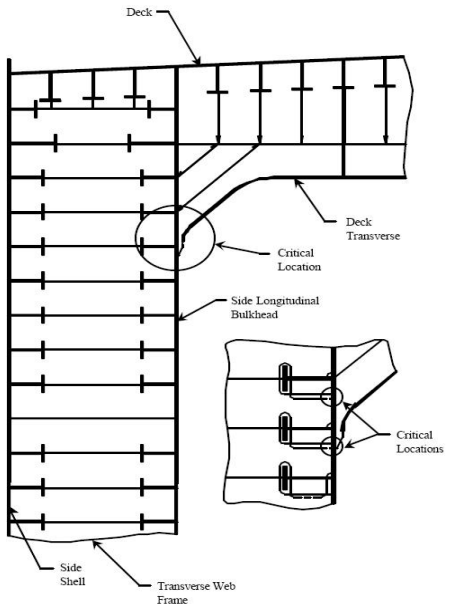
</td><td colspan="2">(C) Elimination of scallops and fitting of slit type collars
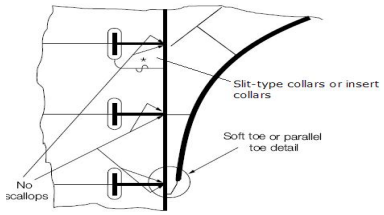
</td></tr>
<tr><td rowspan="2">Structural details</td><td>Applicable structures</td><td colspan="2">Explanations</td></tr>
<tr><td>Toe connections of deck transverse end brackets to transverse webs in double side tanks</td><td colspan="2">(A) Soft toe detail with full penetration welding, or (B) Parallel toe detail with deep penetration welding is to be fitted. (C) Elimination of scallops and fitting of slit type collars.</td></tr>
<tr><td>Building tolerances</td><td colspan="3">The nominal distance between the centres of bracket toe thickness and transverse web thickness is not to exceed 1/3 of side longitudinal bulkhead thickness.</td></tr>
<tr><td>Welding requirements</td><td colspan="3">Deep penetration welding (Connection of bracket toes to side longitudinal bulkhead). Fillet welding having minimum weld factor of 0.44 (Connection of transverse webs in way of bracket toes to side longitudinal bulkhead). The extent of full penetration is to be as required by the designer, or as agreed with the Plan Approval Surveyor. A wraparound weld, with smooth transition and free of weld defects liable to cause stress concentration, i.e. undercuts, notches etc, around toe connections of deck transverse end brackets to transverse webs in double side tanks. Small scallops of suitable shape, which are to be closed by welding after completion of the continuous welding of longitudinal bulkhead stiffeners to longitudinal bulkhead, are to be</td></tr>
</table>

	provided where scallops are eliminated. Full penetration welding is to be carried out in way of * as marked in the Figure above using slit type collars or insert collars of the same material and thickness, replacing fillet welding using lapped collars. See Section 4, Chapter 1, PART TWO of Rules for Classification of Sea-going Steel Ships for other requirements.

<table>
<tr><td colspan="3">Structural details of container ships</td><td>Table 1</td></tr>
<tr><td colspan="4">Area: Double bottom
Critical location: Floor vertical flat bar stiffener connection to bottom and inner bottom longitudinals</td></tr>
<tr><td colspan="2">Critical areas</td><td colspan="2">Structural details</td></tr>
<tr><td colspan="2">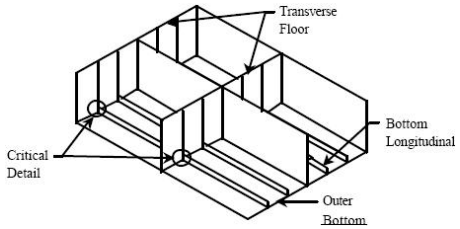
</td><td colspan="2" rowspan="3">(A) Soft heel
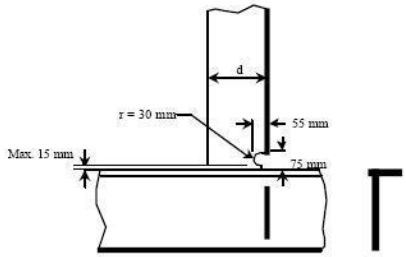

(B) Soft toe and soft heel
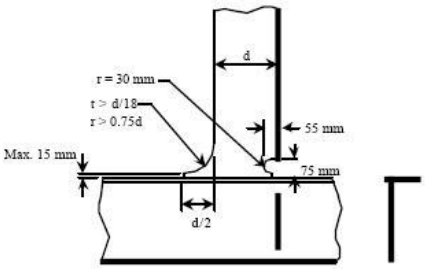

(C) Soft toe and soft backing bracket
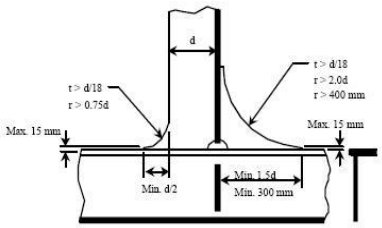
</td></tr>
<tr><td colspan="2">Critical locations</td></tr>
<tr><td colspan="2">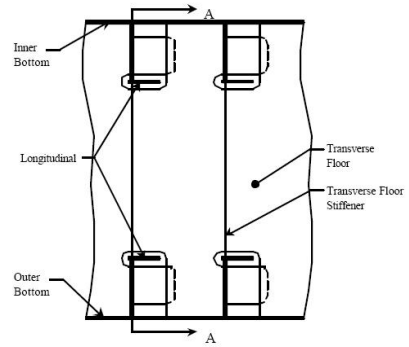

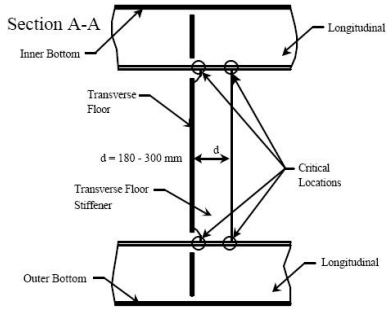
</td></tr>
<tr><td rowspan="2">Structural details</td><td>Applicable structures</td><td>Explanations</td></tr>
<tr><td>Floor vertical flat bar stiffener connection to bottom and inner bottom longitudinals</td><td>(C) Soft toe and soft backing bracket is to be fitted.</td></tr>
<tr><td>Building tolerances</td><td colspan="3">Ensure good alignment between web of longitudinal, floor stiffener and backing bracket, if fitted. For stiffener and bracket alignment of structural details (B) and (C), see relevant requirements in Section 11, PART TEN of Rules for Classification of Sea-going Steel Ships. If soft heel is used, the remaining cross-sectional area across the minimum width of the stiffener web is to be verified against the Rule requirements.</td></tr>
<tr><td>Welding requirements</td><td colspan="3">Ensure start and stop of welding is as far away as practicable from the stiffener/bracket heel and toe. A wraparound weld, with smooth transition and free of weld defects liable to cause stress concentration, i.e. undercuts, notches etc, around the heel and toe connections of the stiffener and backing bracket connection to longitudinal. See Section 4, Chapter 1, PART TWO of Rules for Classification of Sea-going Steel Ships for other requirements.</td></tr>
</table>

Structural details of container ships	Table 2

Area: Double bottom

Critical location: Intersection of bottom and inner bottom longitudinals with floor, including offset stiffener

Critical areas	Structural details
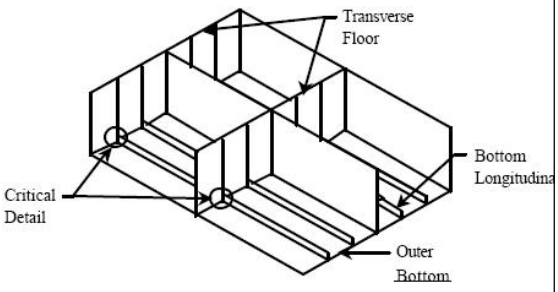	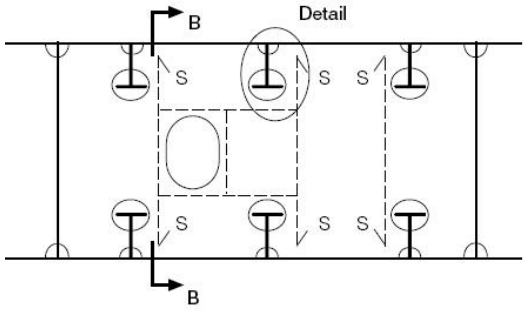
Critical locations	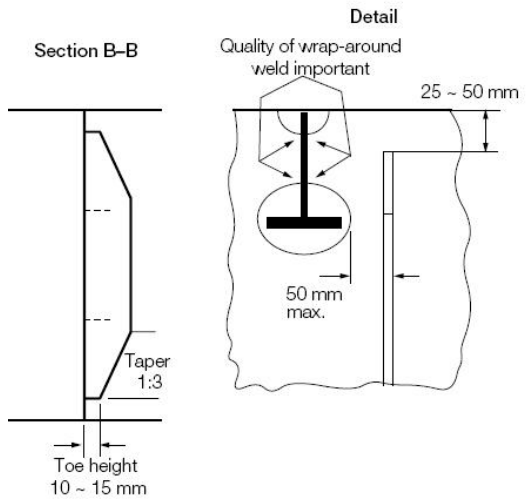
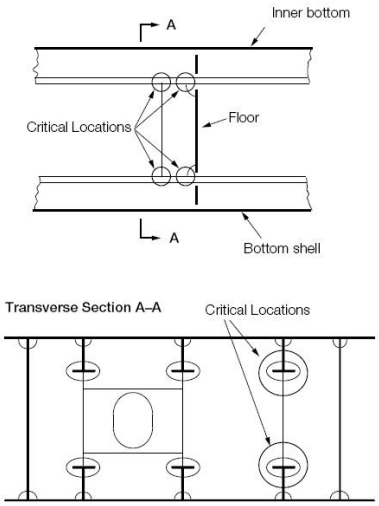	

	Applicable structures	Explanations
Structural details	Intersection of bottom and inner bottom longitudinals with floor, including offset stiffener	Offset stiffener can be used to eliminate the stress concentration in the connection between the longitudinal and the floor stiffener. Scallops may be avoided by the provision of 45º cut corners with sufficient clearance to allow closing by weld. Offset stiffener can be applied to other double skin structures, such as side tanks. Special consideration is to be given if concentrated loads are applied.
Building tolerances	The distance between the offset stiffener and the cut-out of the longitudinal member is not to be less than 50 mm.	
Welding requirements	Special attention is to be drawn to the quality of the wraparound weld at the end of the offset stiffener and at the web/floor connection. A wraparound weld, with smooth transition and free of weld defects liable to cause stress concentration, i.e. undercuts, notches etc. See Section 4, Chapter 1, PART TWO of Rules for Classification of Sea-going Steel Ships for other requirements.	

<table>
<tr><td colspan="3">Structural details of container ships</td><td>Table 3</td></tr>
<tr><td colspan="4">Area: Bilge tank
Critical location: Heel and toe connection of the bilge tank transverse web stiffeners to the bottom, bilge and side shell longitudinals</td></tr>
<tr><td colspan="2">Critical areas</td><td colspan="2">Structural details</td></tr>
<tr><td colspan="2">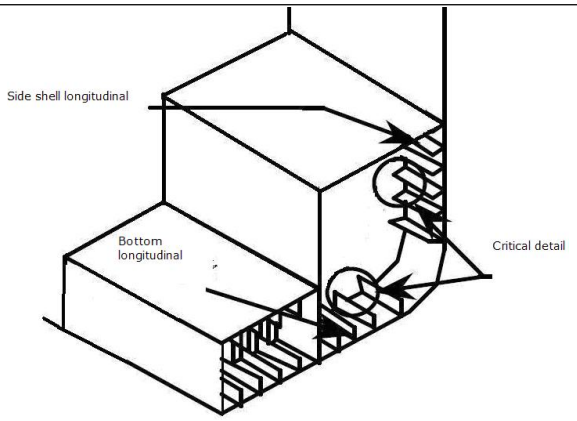
</td><td colspan="2">(A) Soft heel
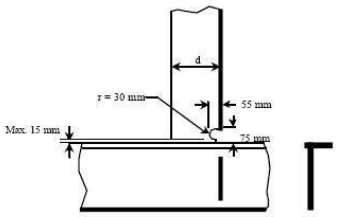

(B) Soft toe and soft heel
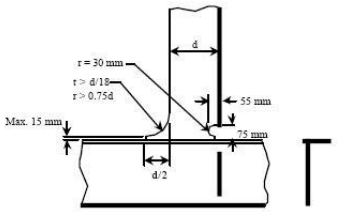

(C) Soft toe and soft backing bracket
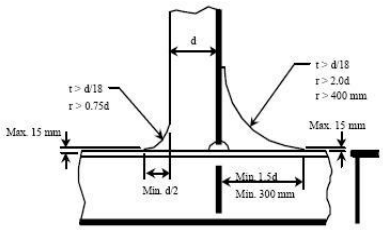
</td></tr>
<tr><td colspan="2">Critical locations</td><td colspan="2"></td></tr>
<tr><td colspan="2">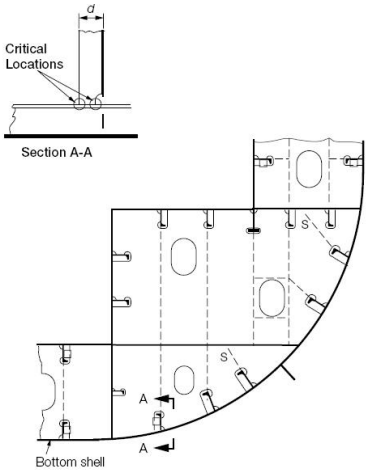
</td><td colspan="2"></td></tr>
<tr><td rowspan="2">Structural details</td><td>Applicable structures</td><td colspan="2">Explanations</td></tr>
<tr><td>Heel and toe connection of the bilge tank transverse web stiffeners to the bottom, bilge and side shell longitudinals.</td><td colspan="2">(C) Soft toe and soft backing bracket is to be fitted.</td></tr>
<tr><td>Building tolerances</td><td colspan="3">Ensure good alignment between web of longitudinal, transverse web stiffener and backing bracket, if fitted. For stiffener and bracket alignment of structural details (B) and (C), see relevant requirements in Section 11, PART TEN of Rules for Classification of Sea-going Steel Ships. If soft heel is used, the remaining cross-sectional area across the minimum width of the stiffener web is to be verified against the Rule requirements.</td></tr>
<tr><td>Welding requirements</td><td colspan="3">Ensure start and stop of welding is as far away as practicable from the heel and toe. A wraparound weld, with smooth transition and free of weld defects liable to cause stress concentration, i.e. undercuts, notches etc, around the heel and toe connections of the stiffener and backing bracket connection to longitudinal. See Section 4, Chapter 1, PART TWO of Rules for Classification of Sea-going Steel Ships for other requirements.</td></tr>
</table>

<table>
<tr><td colspan="3">Structural details of container ships</td><td>Table 4</td></tr>
<tr><td colspan="4">Area: Bilge tank
Critical location: Heel and toe connection of the bilge tank transverse web tripping brackets to the bottom, bilge and side shell longitudinals</td></tr>
<tr><td colspan="2">Critical areas</td><td colspan="2">Structural details</td></tr>
<tr><td colspan="2" rowspan="2">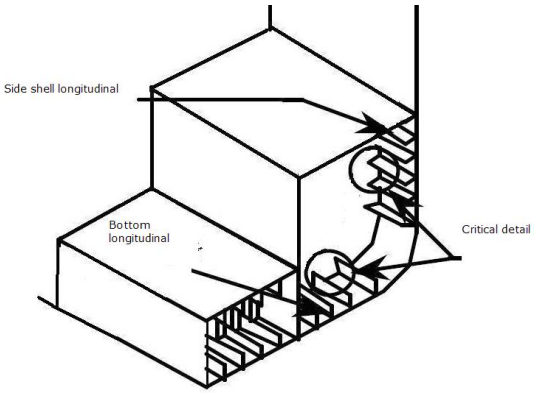
</td><td colspan="2">(A) Soft heel
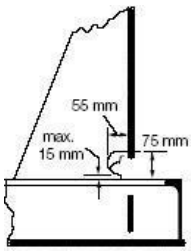

(B) Soft toe and soft heel
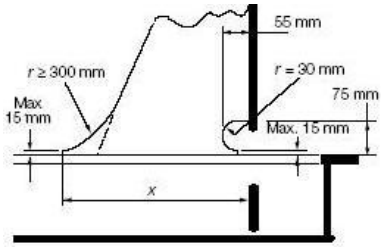

(C) Soft toe and soft backing bracket
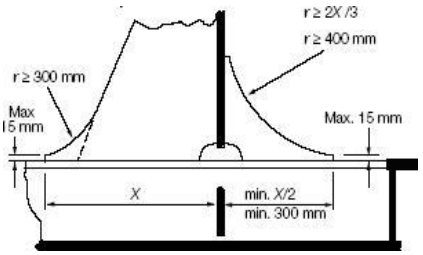
</td></tr>
<tr><td colspan="2">Critical locations</td></tr>
<tr><td colspan="2">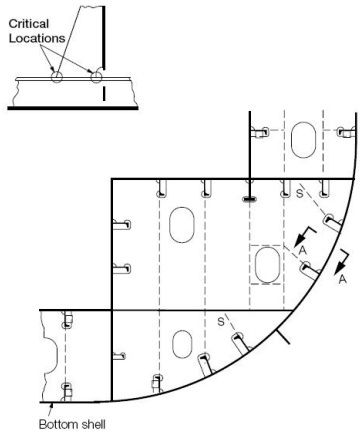
</td></tr>
<tr><td rowspan="2">Structural details</td><td>Applicable structures</td><td colspan="2">Explanations</td></tr>
<tr><td>Heel and toe connection of the bilge tank transverse web tripping brackets to the bottom, bilge and side shell longitudinals</td><td colspan="2">(C) Soft toe and soft backing bracket is to be fitted.</td></tr>
<tr><td>Building tolerances</td><td colspan="3">Ensure good alignment between longitudinal stiffener web, transverse web tripping brackets and backing bracket, if fitted. For recommended stiffener and bracket alignment, see relevant requirements in Section 11, PART TEN of Rules for Classification of Sea-going Steel Ships.</td></tr>
<tr><td>Welding requirements</td><td colspan="3">Ensure start and stop of welding is as far away as practicable from the heel and toe. A wraparound weld, with smooth transition and free of weld defects liable to cause stress concentration, i.e. undercuts, notches etc, around the heel and toe connections of the transverse web tripping bracket and backing bracket connection to longitudinal. See Section 4, Chapter 1, PART TWO of Rules for Classification of Sea-going Steel Ships for other requirements.</td></tr>
</table>

<table>
<tr><td colspan="3">Structural details of container ships</td><td>Table 5</td></tr>
<tr><td colspan="4">Area: Bilge tank
Critical location: Side girder connections to inner bottom plating in way of floors</td></tr>
<tr><td colspan="2">Critical areas</td><td colspan="2">Structural details</td></tr>
<tr><td colspan="2">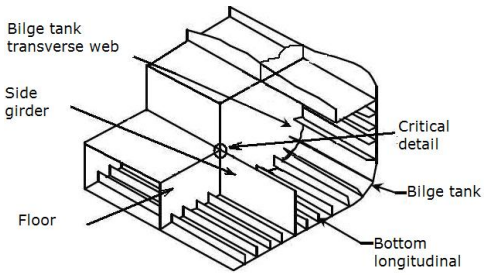
</td><td colspan="2" rowspan="3">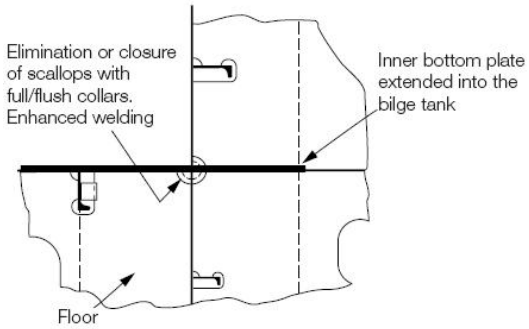

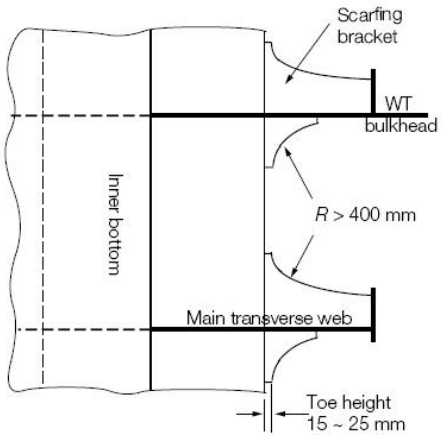
</td></tr>
<tr><td colspan="2">Critical locations</td></tr>
<tr><td colspan="2">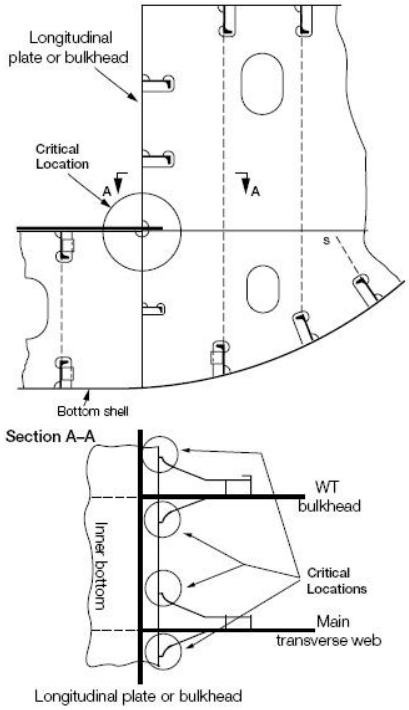
</td></tr>
<tr><td rowspan="2">Structural details</td><td>Applicable structures</td><td>Explanations</td></tr>
<tr><td>Side girder connections to inner bottom plating in way of floors</td><td>Elimination of scallops in way of bilge tank corners scarfing brackets in line with inner bottom extension to reduce the fatigue hot spot stress</td></tr>
<tr><td>Building tolerances</td><td colspan="3">Ensure good alignment between inner bottom plate and backing brackets.</td></tr>
<tr><td>Welding requirements</td><td colspan="3">Enhanced fillet welding with weld factor 0.44 (Connection of side girders to inner bottom plating. Connection of floors to side girders. Connection of bilge transverse webs to side girders). Small scallops of suitable shape are to be closed by full penetration welding after completion of the continuous welding of side girders to inner bottom plating, using watertight collars of the same material and thickness. See Section 4, Chapter 1, PART TWO of Rules for Classification of Sea-going Steel Ships for other requirements.</td></tr>
</table>

Structural details of container ships	Table 6

Area: Bilge tank

Critical location: Side girder connections to inner bottom plating in way of floors.

Critical areas	Structural details
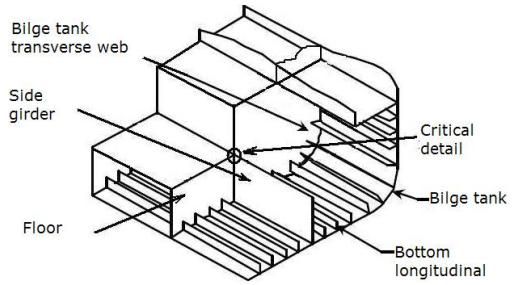	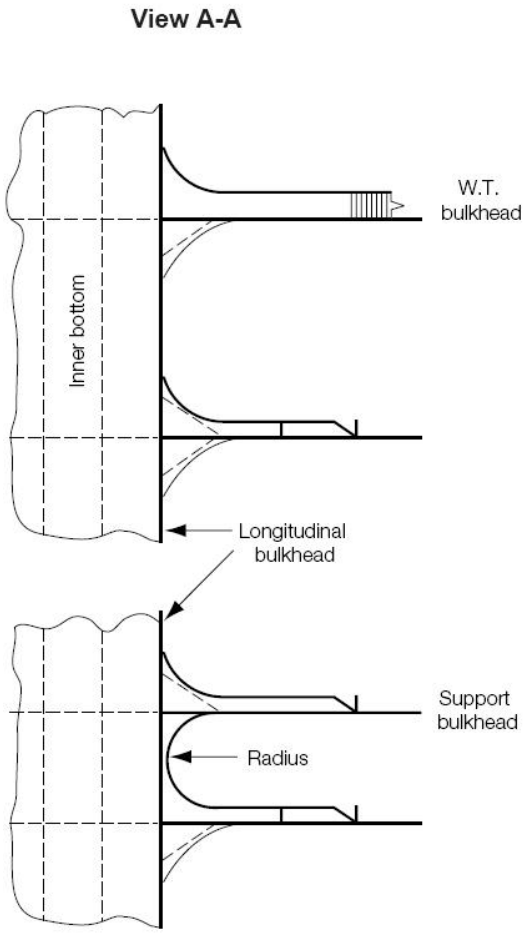
Critical locations	
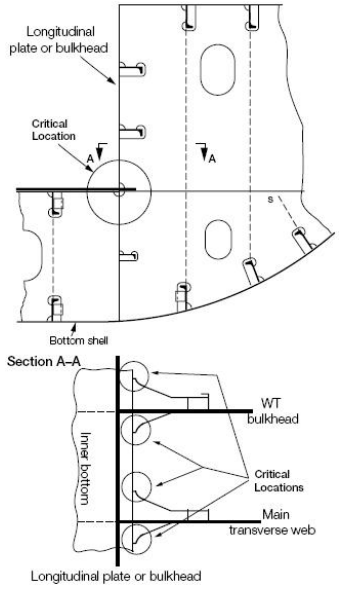	

	Applicable structures	Explanations
Structural details	Side girder connections to inner bottom plating in way of floors	Elimination of scallops in way of bilge tank corners scarfing brackets in line with inner bottom extension to reduce the fatigue hot spot stress
Building tolerances	Ensure good alignment between inner bottom plate and backing brackets.	
Welding requirements	Enhanced fillet welding with weld factor 0.44 (Connection of side girders to inner bottom plating. Connection of floors to side girders. Connection of bilge transverse webs to side girders). Small scallops of suitable shape are to be closed by full penetration welding after completion of the continuous welding of side girders to inner bottom plating, using watertight collars of the same material and thickness. See Section 4, Chapter 1, PART TWO of Rules for Classification of Sea-going Steel Ships for other requirements.	

Structural details of container ships	Table 7

Area: Bilge tank

Critical location: Side longitudinal bulkhead connections to bilge tanktop plate and transverse webs in way of corner

Critical areas	Structural details
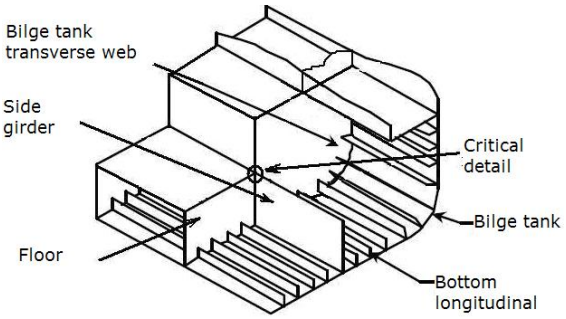	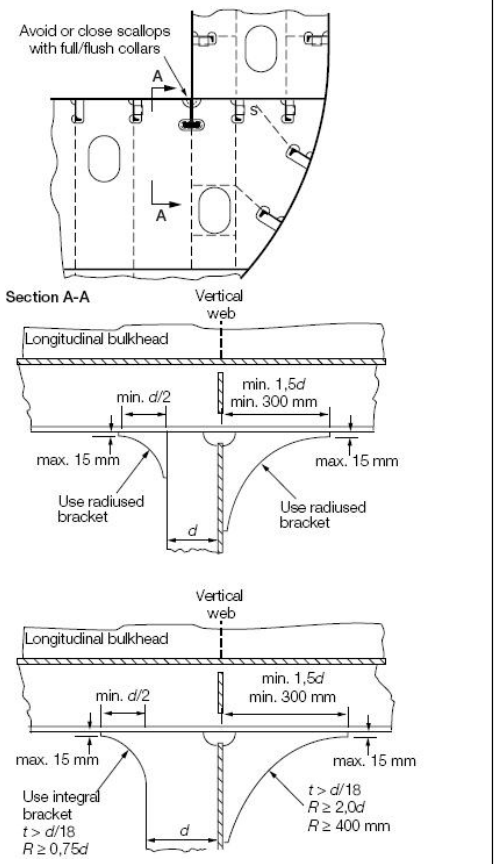
Critical locations	
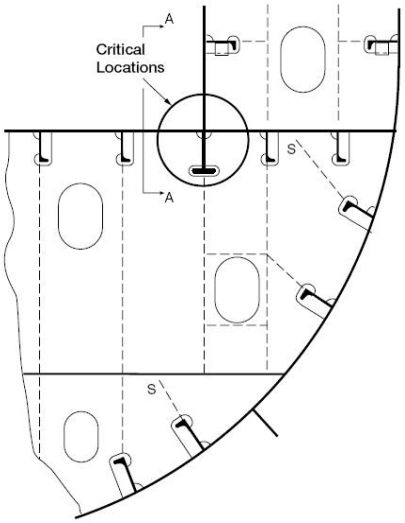	

	Applicable structures	Explanations
Structural details	Side longitudinal bulkhead connections to bilge tanktop plate and transverse webs in way of corner	Elimination of scallops in way of corners and enhanced support below side longitudinal bulkhead provided by increased stiffener below and supporting brackets to reduce peak and range of resultant stresses arising from cyclic external hydrodynamic pressure, cargo inertia loads and hull girder global loading.
Building tolerances	Ensure good alignment between longitudinal bulkhead and backing bracket. If soft heel is used, the remaining cross-sectional area across the minimum width of the stiffener web is to be verified against the Rule requirements.	
Welding requirements	Enhanced fillet welding with weld factor 0.44 (connection of longitudinal bulkheads and backing bracket to bilge tank top plating). Scallop cut-outs in way are to be closed by collars after completion of the continuous welding of plating in the vicinity of knuckle. See Section 4, Chapter 1, PART TWO of Rules for Classification of Sea-going Steel Ships for other requirements.	

<table>
<tr><td colspan="3">Structural details of container ships</td><td>Table 8</td></tr>
<tr><td colspan="4">Area: Bilge tank
Critical location: Side longitudinal bulkhead connections to bilge tanktop plate and transverse webs in way of corner</td></tr>
<tr><td colspan="2">Critical areas</td><td colspan="2">Structural details</td></tr>
<tr><td colspan="2">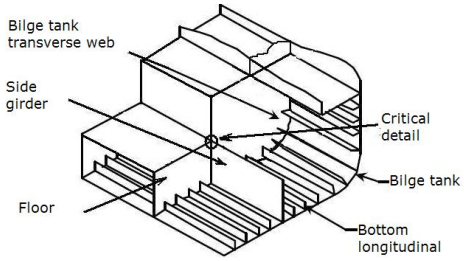
</td><td colspan="2" rowspan="2">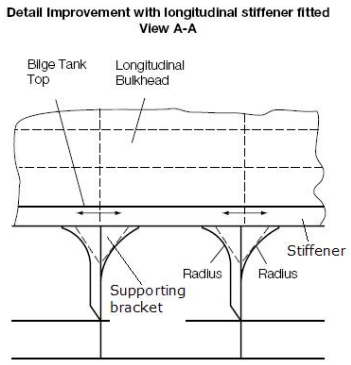

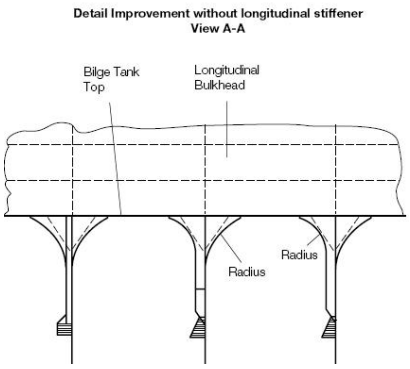
</td></tr>
<tr><td colspan="2">Critical locations</td></tr>
<tr><td colspan="2">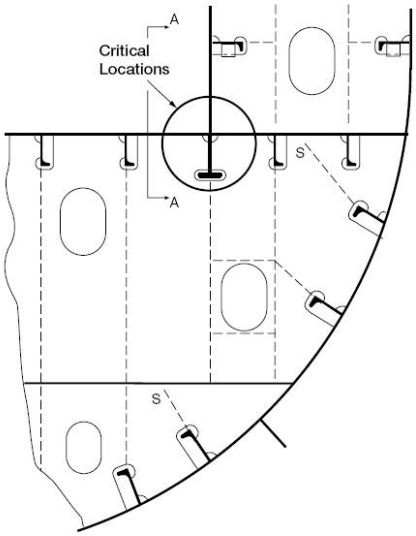
</td></tr>
<tr><td rowspan="2"></td><td>Applicable structures</td><td>Explanations</td></tr>
<tr><td>Structural details</td><td>Side longitudinal bulkhead connections to bilge tanktop plate and transverse webs in way of corner</td><td>Elimination of scallops in way of corners and enhanced support below side longitudinal bulkhead provided by increased stiffener below and supporting brackets to reduce the hot spot stress in critical locations</td></tr>
<tr><td>Building tolerances</td><td colspan="2">Ensure good alignment between longitudinal bulkhead and backing bracket. If soft heel is used, the remaining cross-sectional area across the minimum width of the stiffener web is to be verified against the Rule requirements.</td></tr>
<tr><td>Welding requirements</td><td colspan="2">Enhanced fillet welding with weld factor 0.44 (connection of longitudinal bulkheads to bilge tank top plating). Scallop cut-outs in way are to be closed by collars after completion of the continuous welding of plating in the vicinity of knuckle. See Section 4, Chapter 1, PART TWO of Rules for Classification of Sea-going Steel Ships for other requirements.</td></tr>
</table>

<table>
<tr><td colspan="3">Structural details of container ships</td><td>Table 9</td></tr>
<tr><td colspan="4">Area: Side tanks/underdeck passage
Critical location: Heel and toe connections of horizontal flat bar stiffeners on transverse webs to side shell longitudinals in side tanks (connections from the base line to just above the load waterline)</td></tr>
<tr><td colspan="2">Critical areas</td><td colspan="2">Structural details</td></tr>
<tr><td colspan="2">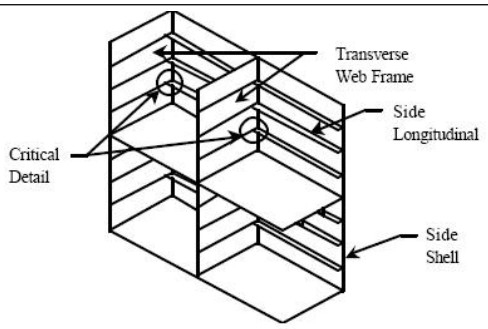
</td><td colspan="2" rowspan="3">(A) Soft heel
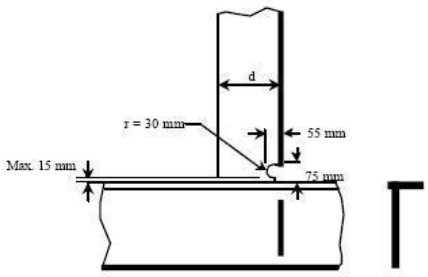

(B) Soft toe and soft heel
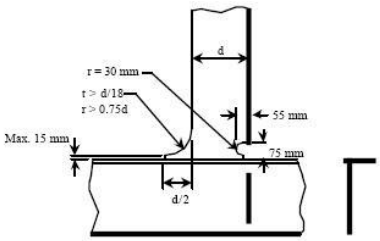

(C) Soft toe and soft backing bracket
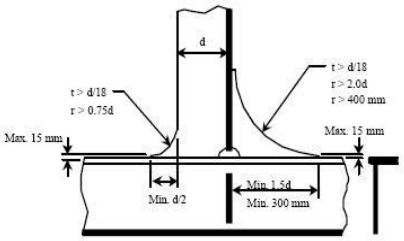
</td></tr>
<tr><td colspan="2">Critical locations</td></tr>
<tr><td colspan="2">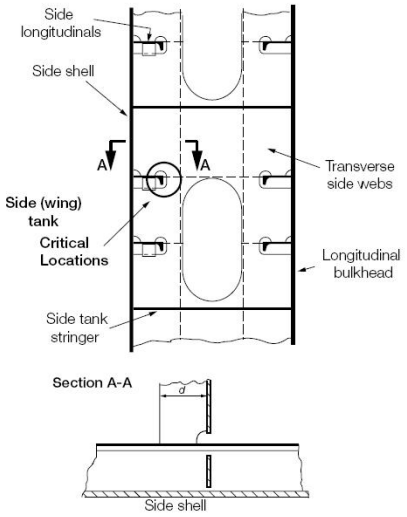
</td></tr>
<tr><td rowspan="2">Structural details</td><td>Applicable structures</td><td colspan="2">Explanations</td></tr>
<tr><td>Heel and toe connections of horizontal flat bar stiffeners on transverse webs to side shell longitudinals in side tanks.</td><td colspan="2">Soft heel or soft toe and heel detail or symmetrical soft toe with soft backing bracket can be used to reduce the fatigue hot spot stress in critical locations</td></tr>
<tr><td>Building tolerances</td><td colspan="3">Ensure good alignment between web of longitudinal, transverse web stiffener and backing bracket, if fitted. For recommended stiffener and bracket alignment, see relevant requirements in Section 11, PART TEN of Rules for Classification of Sea-going Steel Ships. If soft heel is used, the remaining cross-sectional area across the minimum width of the stiffener web is to be verified against the Rule requirements.</td></tr>
<tr><td>Welding requirements</td><td colspan="3">Ensure start and stop of welding is as far away as practicable from the heel and toe of stiffeners and backing brackets. A wraparound weld, with smooth transition and free of weld defects liable to cause stress concentration, i.e. undercuts, notches etc, around the heel and toe connections of horizontal flat bar stiffeners and backing bracket connection to longitudinal. See Section 4, Chapter 1, PART TWO of Rules for Classification of Sea-going Steel Ships for other requirements.</td></tr>
</table>

Structural details of container ships	Table 10

Area: Side tanks/underdeck passage

Critical location: Heel and toe connections of horizontal tripping brackets on transverse webs to side shell longitudinals (connections from the base line to just above the load waterline)

Critical areas	Structural details
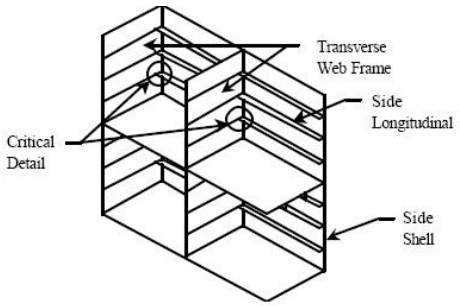	(A) Soft heel 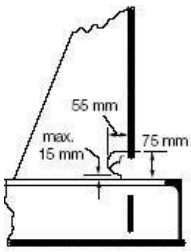
Critical locations	(B) Soft toe and soft heel 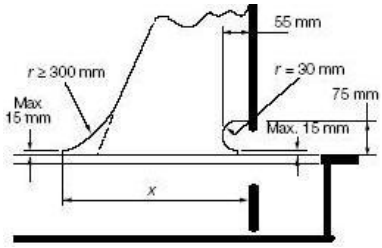
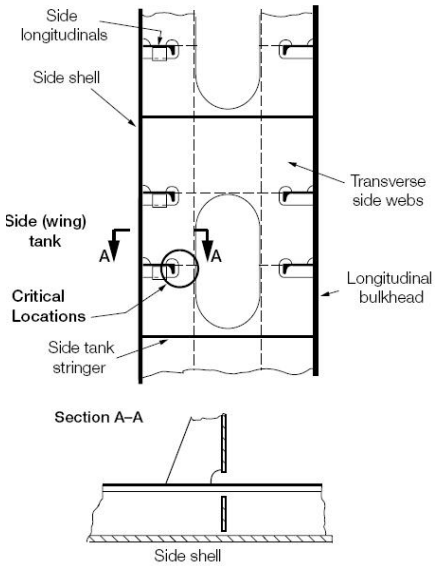	(C) Soft toe and soft backing bracket 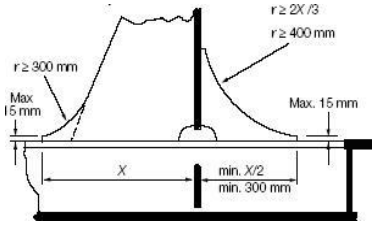

	Applicable structures	Explanations
Structural details	Heel and toe connections of horizontal tripping brackets on transverse webs to side shell longitudinals	Soft heel or soft toe and heel detail or symmetrical soft toe with soft backing bracket can be used to reduce peak and range of resultant stresses arising from cyclic external hydrodynamic pressure and hull girder loading.
Building tolerances	Ensure good alignment of the tripping brackets, the backing bracket and the web of the side longitudinal. See relevant requirements in Section 11, PART TEN of Rules for Classification of Sea-going Steel Ships.	
Welding requirements	Ensure start and stop of welding is as far away as practicable from the heel and toe of tripping brackets and backing brackets. A wraparound weld, with smooth transition and free of weld defects liable to cause stress concentration, i.e. undercuts, notches etc, around the heel and toe connections of stiffeners and backing bracket connection to longitudinal. See Section 4, Chapter 1, PART TWO of Rules for Classification of Sea-going Steel Ships for other requirements.	

<table>
<tr><td colspan="3">Structural details of container ships</td><td>Table 11</td></tr>
<tr><td colspan="4">Area: Deck, hatch corners and between hatches
Critical location: Deck plating in way of the hatch corners of cargo region</td></tr>
<tr><td colspan="2">Critical areas</td><td colspan="2">Structural details</td></tr>
<tr><td colspan="2">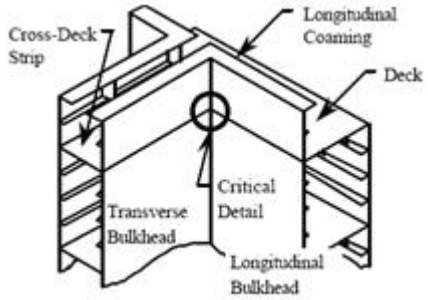
</td><td colspan="2">(A) Large radius deck corner insert plate
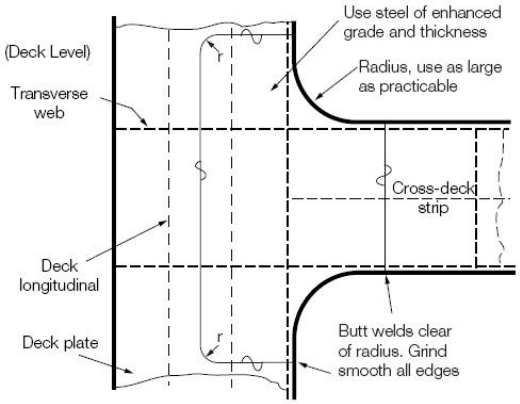
</td></tr>
<tr><td colspan="2">Critical locations</td><td colspan="2">(B) Extend insert plate to side shell
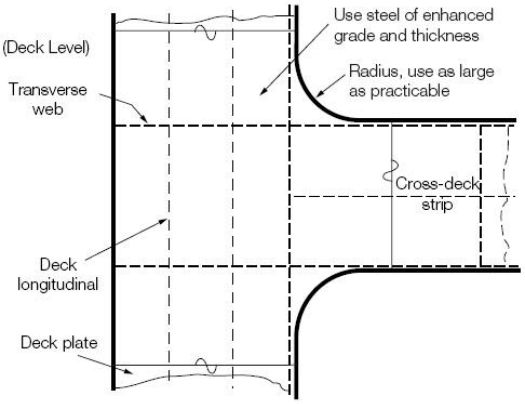
</td></tr>
<tr><td colspan="2">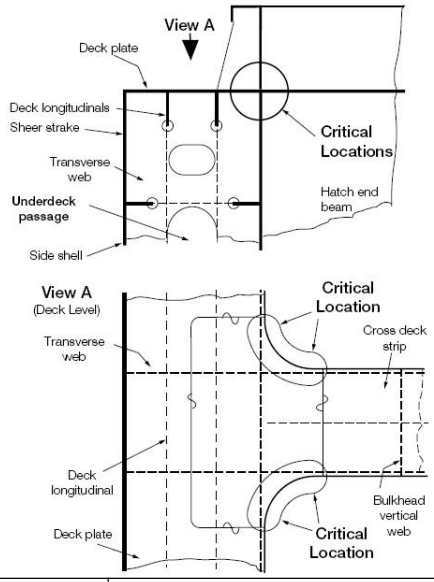
</td><td colspan="2"></td></tr>
<tr><td rowspan="2">Structural details</td><td>Applicable structures</td><td colspan="2">Explanations</td></tr>
<tr><td>Deck plating in way of the hatch corners of cargo region</td><td colspan="2">Use insert plates of enhanced steel grade and thickness. Attention is drawn to the transition of plating of different thickness. See the requirements for hatch corners in Chapter 2, PART TWO of Rules for Classification of Sea-going Steel Ships.</td></tr>
<tr><td>Building tolerances</td><td colspan="3">Ensure good alignment between hatch end beam and support in the topside tank. Special attention is drawn to taper details of the insert plate. Insert plates may be avoided by modifying the corner detail to reduce stress levels and use EH grade plate.</td></tr>
<tr><td>Welding requirements</td><td colspan="3">Ensure start and stop of welding is as far away as practicable from the corners of the insert plate. Ensure smooth transition of welds between corner insert plates and upper deck plating. Attention is drawn to the protection of corners. Ensure weld profiles are ground smooth and free of notches after fit-up in way of insert plate free edges. See Section 4, Chapter 1, PART TWO of Rules for Classification of Sea-going Steel Ships for other requirements.</td></tr>
</table>

<table>
<tr><td colspan="3">Structural details of container ships</td><td>Table 12</td></tr>
<tr><td colspan="4">Area: Deck, hatch corners and between hatches
Critical location: Deck plating in way of the hatch corners near superstructure, intersection of hatch coaming with superstructure</td></tr>
<tr><td colspan="2">Critical areas</td><td colspan="2">Structural details</td></tr>
<tr><td colspan="2">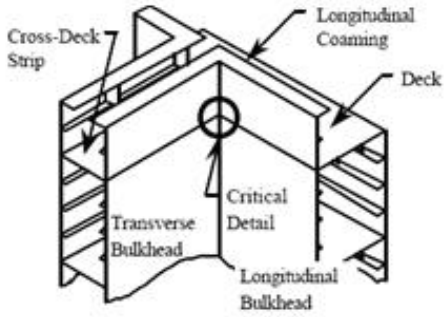
</td><td colspan="2">Extending deck corner insert plate to side shell, and/or introduction of large radius corner
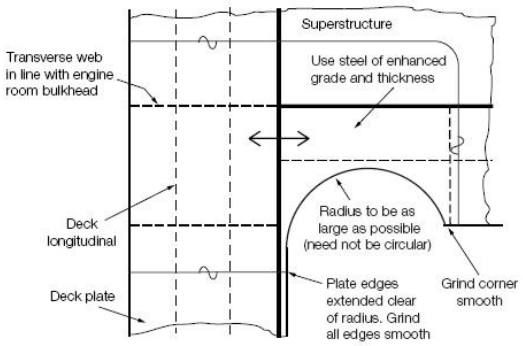
</td></tr>
<tr><td colspan="2">Critical locations</td><td colspan="2"></td></tr>
<tr><td colspan="2">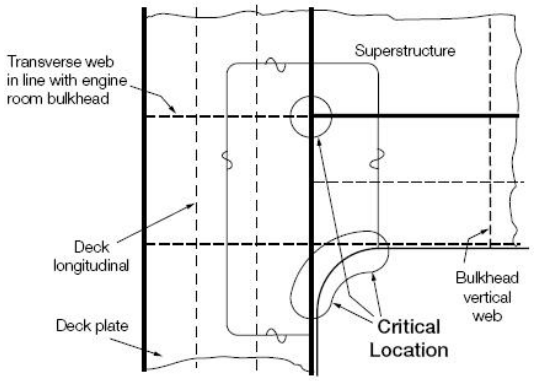
</td><td colspan="2"></td></tr>
<tr><td rowspan="2">Structural details</td><td>Applicable structures</td><td colspan="2">Explanations</td></tr>
<tr><td>Deck plating in way of the hatch corners near superstructure, intersection of hatch coaming with superstructure.</td><td colspan="2">Use insert plates of enhanced steel grade and thickness. A radiused corner is to be provided to reduce stress concentration. Attention is drawn to the transition of plating of different thickness. See the requirements for hatch corners in Chapter 2, PART TWO of Rules for Classification of Sea-going Steel Ships. Grind edge smooth of the bracket to superstructure and use enhanced steel grade and thickness in superstructure side shell.</td></tr>
<tr><td>Building tolerances</td><td colspan="3">Ensure good alignment between main structure support members in the vicinity.</td></tr>
<tr><td>Welding requirements</td><td colspan="3">Ensure start and stop of welding is as far away as practicable from the toes of brackets or corners. A wraparound weld, with smooth transition and free of weld defects, i.e. undercuts, notches etc, around connections of bracket toes to upper deck. See Section 4, Chapter 1, PART TWO of Rules for Classification of Sea-going Steel Ships for other requirements.</td></tr>
</table>

<table>
<tr><td colspan="3">Structural details of container ships</td><td>Table 13</td></tr>
<tr><td colspan="4">Area: Deck, hatch corners and between hatches
Critical location: Deck plating in way of the hatch corners near superstructure, intersection of hatch coaming with superstructure.</td></tr>
<tr><td colspan="2">Critical areas</td><td colspan="2">Structural details</td></tr>
<tr><td colspan="2">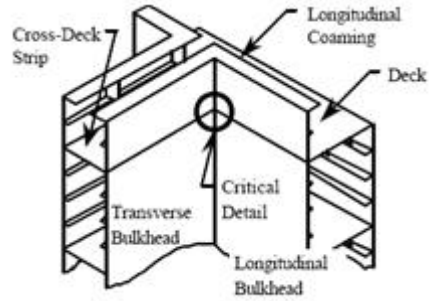
</td><td colspan="2" rowspan="3">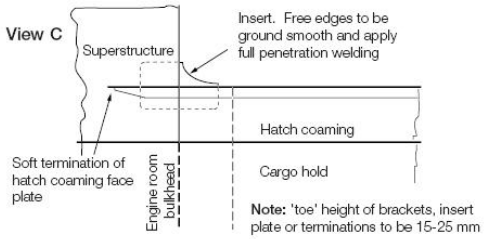

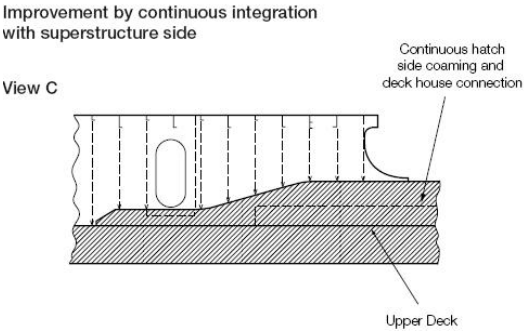
</td></tr>
<tr><td colspan="2">Critical locations</td></tr>
<tr><td colspan="2">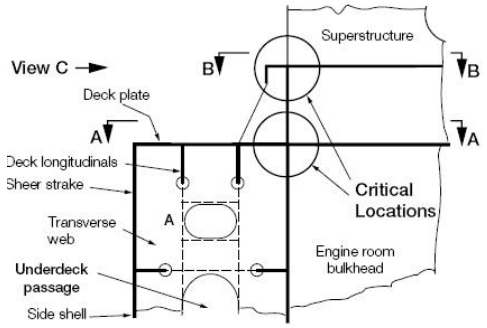
</td></tr>
<tr><td rowspan="2">Structural details</td><td>Applicable structures</td><td>Explanations</td></tr>
<tr><td>Deck plating in way of the hatch corners near superstructure, intersection of hatch coaming with superstructure.</td><td>Use insert plates of enhanced steel grade and thickness. A radiused corner is to be provided to reduce stress concentration. Ensure gradual transition or tapering to thinner plating as far as practicable. Attention is drawn to the requirements for hatch corners in Chapter 2, PART TWO of Rules for Classification of Sea-going Steel Ships. Grind edge smooth of the bracket to superstructure and use enhanced steel grade and thickness in superstructure side shell.</td></tr>
<tr><td>Building tolerances</td><td colspan="2">Ensure good alignment between main structure support members in the vicinity.</td></tr>
<tr><td>Welding requirements</td><td colspan="2">Ensure start and stop of welding is as far away as practicable from the toes of brackets or corners. A wraparound weld, with smooth transition and free of weld defects, i.e. undercuts, notches etc, around toe connections of bracket to upper deck and toe connections of insert plating to superstructure. See Section 4, Chapter 1, PART TWO of Rules for Classification of Sea-going Steel Ships for other requirements.</td></tr>
</table>

Structural details of container ships	Table 14

Area: Deck, hatch corners and between hatches

Critical location: Toe connection of continuous coaming stay bracket to the deck plating

Critical areas	Structural details

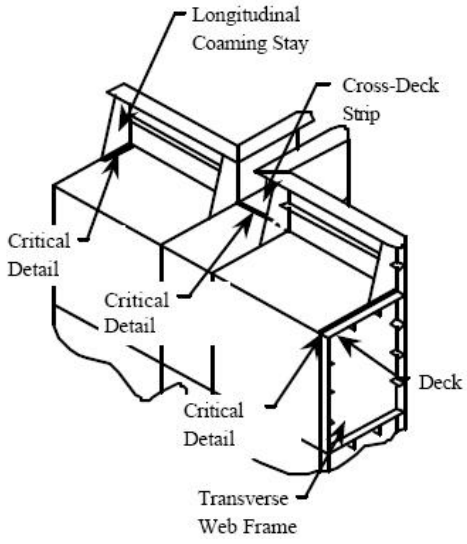

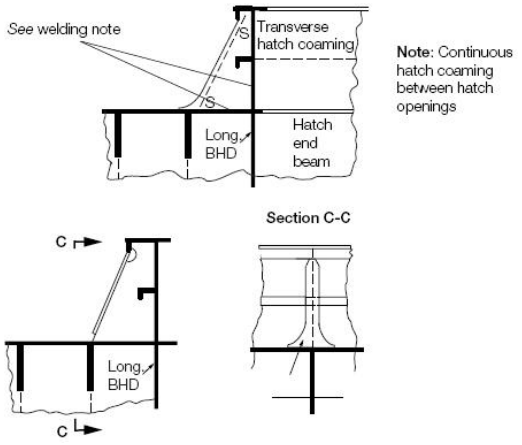

Critical locations

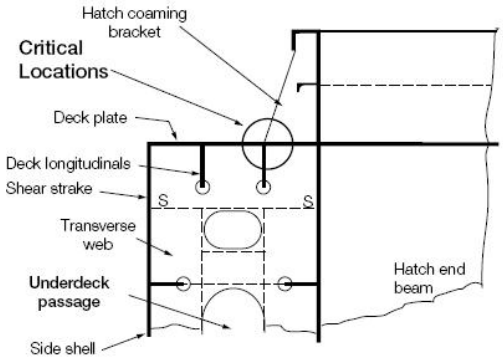

	Applicable structures	Explanations
Structural details	Toe connection of continuous coaming stay bracket to the deck plating	Extend the hatch coaming, the transverse bulkheads and the transverse bracket to provide an integral soft toe for smooth transition of stresses into the deck.
Building tolerances	Ensure good alignment between stay brackets and supporting structure. Misalignment is to be not greater than (t/3) where t is the thinner of the webs to be aligned (measured at the thickness centre).	
Welding requirements	Ensure start and stop of welding is as far away as practicable from the toes of brackets or corners. A wraparound weld, with smooth transition and free of weld defects liable to cause stress concentration, i.e. undercuts, notches etc, around toe connections of stay brackets to deck plating. Full penetration or deep penetration fillet welding is to be incorporated in welding of hatch coaming stay bracket and hatch coaming in way of transverse bulkheads. See Section 4, Chapter 1, PART TWO of Rules for Classification of Sea-going Steel Ships for other requirements.	

<table>
<tr><td colspan="3">Structural details of container ships</td><td>Table 15</td></tr>
<tr><td colspan="4">Area: Hatch side coaming
Critical location: Termination of longitudinal hatch side coaming</td></tr>
<tr><td colspan="2">Critical areas</td><td colspan="2">Structural details</td></tr>
<tr><td colspan="2">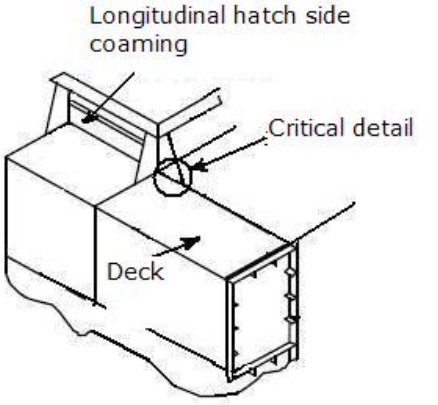
</td><td colspan="2" rowspan="3">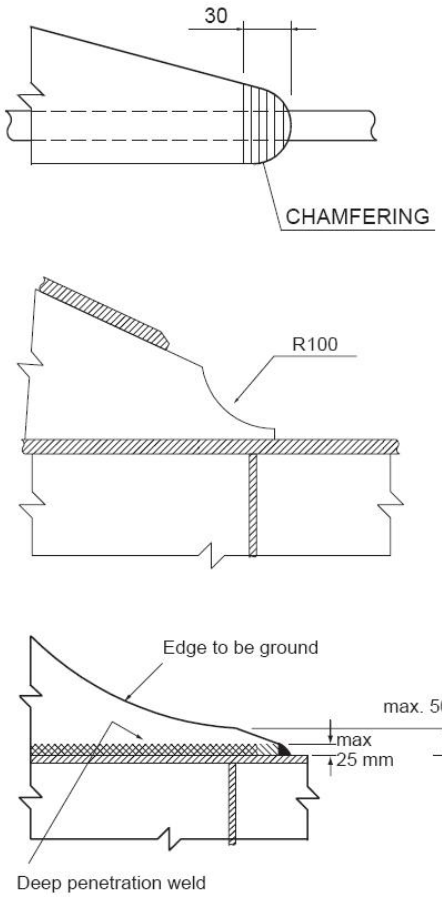
</td></tr>
<tr><td colspan="2">Critical locations</td></tr>
<tr><td colspan="2">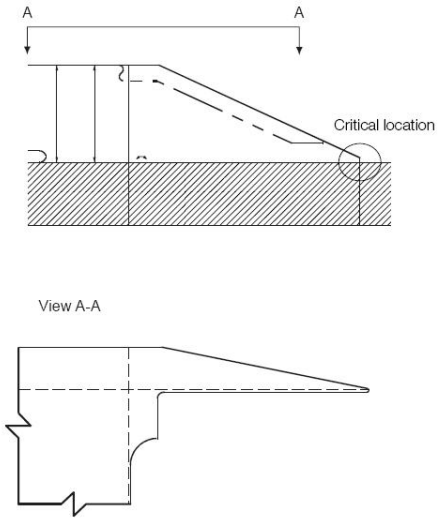
</td></tr>
<tr><td rowspan="2">Structural details</td><td>Applicable structures</td><td>Explanations</td></tr>
<tr><td>Toe connection of the longitudinal hatch side coaming fore and aft termination</td><td>Continuous extended and radiused/reversed radiused coaming with soft toe termination to reduce the stress concentration in hot spot</td></tr>
<tr><td>Building tolerances</td><td colspan="3">Ensure good alignment of termination plate with the underdeck longitudinal member (bulkhead or girder).</td></tr>
<tr><td>Welding requirements</td><td colspan="3">Ensure start and stop of welding is as far away as practicable from the toe. A wraparound weld, with smooth transition and free of weld defects liable to cause stress concentration, i.e. undercuts, notches etc, around toe connection of the longitudinal hatch side coaming fore and aft termination to deck plating. Use deep penetration welding or full penetration welding for a distance of 300 mm from the toe termination. The deep penetration weld and the free edge of the coaming’s termination are to be ground. See Section 4, Chapter 1, PART TWO of Rules for Classification of Sea-going Steel Ships for other requirements.</td></tr>
</table>

<table>
<tr><td colspan="3">Structural details of container ships</td><td>Table 16</td></tr>
<tr><td colspan="4">Area: Watertight and non-watertight bulkheads
Critical location: Connections of hatch end beam to the inner side shell (longitudinal bulkhead), including 2nd deck transverse passageway</td></tr>
<tr><td colspan="2">Critical areas</td><td colspan="2">Structural details</td></tr>
<tr><td colspan="2">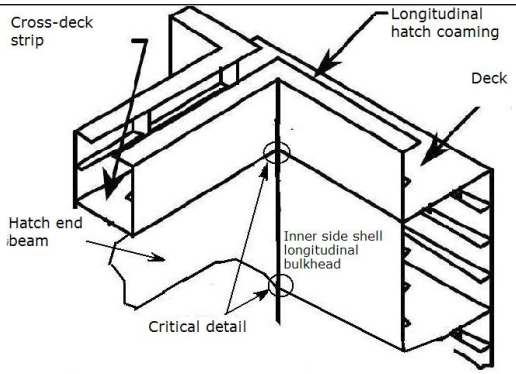
</td><td colspan="2" rowspan="2">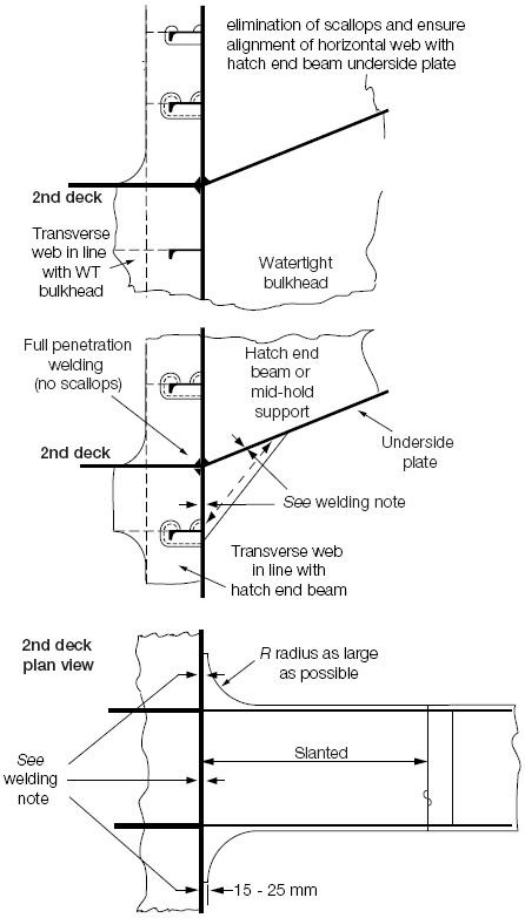
</td></tr>
<tr><td colspan="2">Critical locations</td></tr>
<tr><td colspan="2">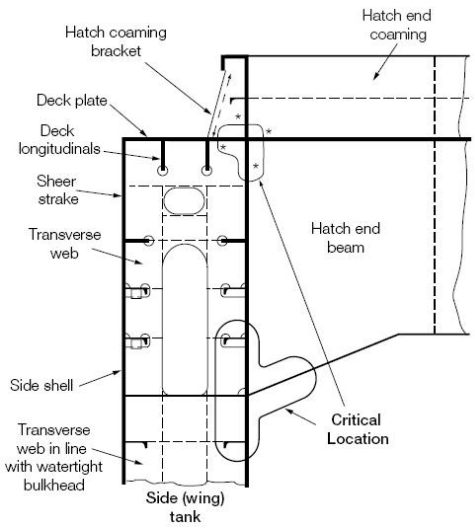
</td></tr>
<tr><td rowspan="2">Structural details</td><td>Applicable structures</td><td>Explanations</td></tr>
<tr><td>Connections of hatch end beam to the inner side shell (longitudinal bulkhead)</td><td>Full collars, elimination of scallops. Increase thickness of hatch end beams and transverse webs in way.</td></tr>
<tr><td>Building tolerances</td><td colspan="2">Ensure good alignment between hatch end beam and side structure.</td></tr>
<tr><td>Welding requirements</td><td colspan="2">Enhanced fillet welds are to have a minimum weld factor of 0.44 (Connection of transverse webs in way of hatch end beam and underside plate to side longitudinal bulkhead). Scallops are to be closed after completion of continuous welding near the hatch end corner. See Section 4, Chapter 1, PART TWO of Rules for Classification of Sea-going Steel Ships for other requirements.</td></tr>
</table>

<table>
<tr><td colspan="3">Structural details of container ships</td><td>Table 17</td></tr>
<tr><td colspan="4">Area: Watertight and non-watertight bulkheads
Critical location: Connections of face plate of horizontal bulkhead stringers to the longitudinal bulkhead</td></tr>
<tr><td colspan="2">Critical areas</td><td colspan="2">Structural details</td></tr>
<tr><td colspan="2">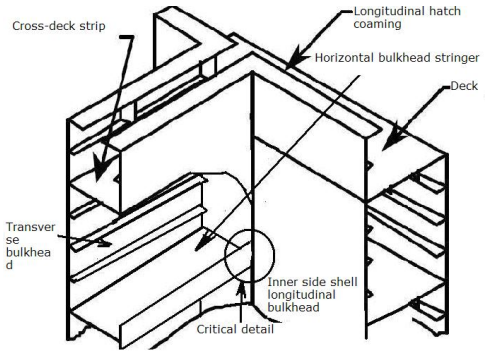
</td><td colspan="2" rowspan="2">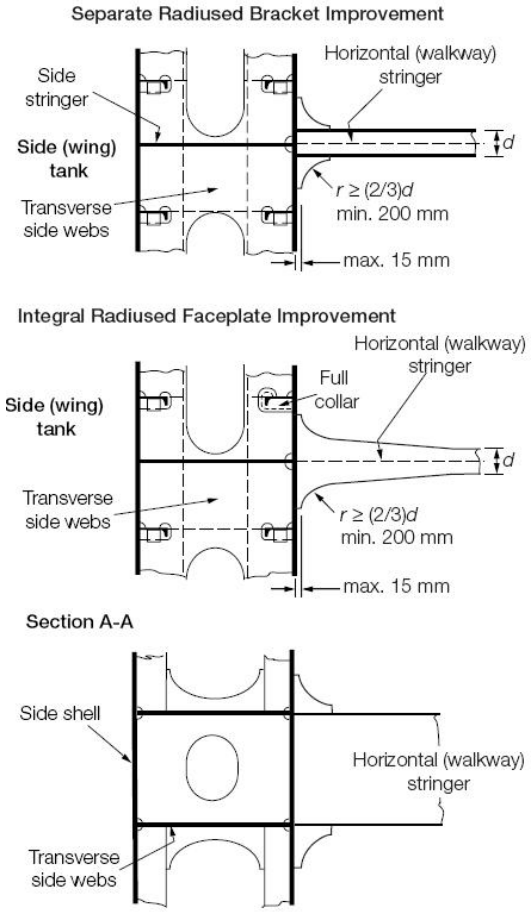
</td></tr>
<tr><td colspan="2">Critical locations</td></tr>
<tr><td colspan="2">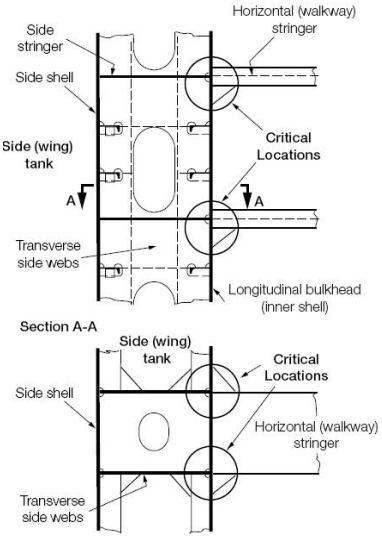
</td></tr>
<tr><td rowspan="2">Structural details</td><td>Applicable structures</td><td>Explanations</td></tr>
<tr><td>Connections of face plate of horizontal bulkhead stringers to the longitudinal bulkhead</td><td>Symmetrical radiused or integral radiused brackets to reduce stress concentration. Use full collars in longitudinal web plates if toes of face plates end close to longitudinal stiffener cut-outs. Further, side and inner shell longitudinals in way of bulkhead structure is to be fitted with brackets.</td></tr>
<tr><td>Building tolerances</td><td colspan="2">Ensure good alignment of the side web and face plates of stringers and of horizontal side and bulkhead stringers.</td></tr>
<tr><td>Welding requirements</td><td colspan="2">Fillet welding having minimum weld factor of 0.34 (Connection of soft toe brackets to face plates of stringers and to longitudinal bulkhead). A wraparound weld, with smooth transition and free of weld defects liable to cause stress concentration, i.e. undercuts, notches etc, around bracket toes. Finally the longitudinal cut-out close to toes of face plates is closed by full penetration welding using watertight collars. See Section 4, Chapter 1, PART TWO of Rules for Classification of Sea-going Steel Ships for other requirements.</td></tr>
</table>

<table>
<tr><td colspan="3">Structural details of container ships</td><td>Table 18</td></tr>
<tr><td colspan="4">Area: Watertight and non-watertight bulkheads
Critical location: Connections of face plate of horizontal bulkhead stringers to the longitudinal bulkhead</td></tr>
<tr><td colspan="2">Critical areas</td><td colspan="2">Structural details</td></tr>
<tr><td colspan="2">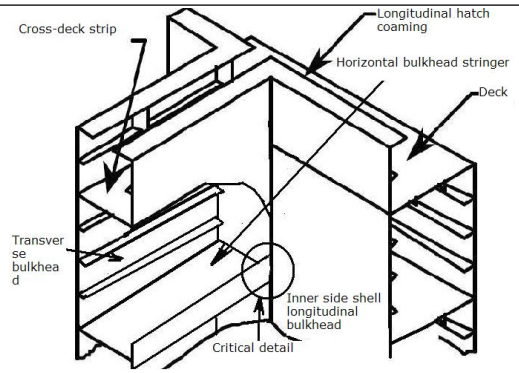
</td><td colspan="2" rowspan="2">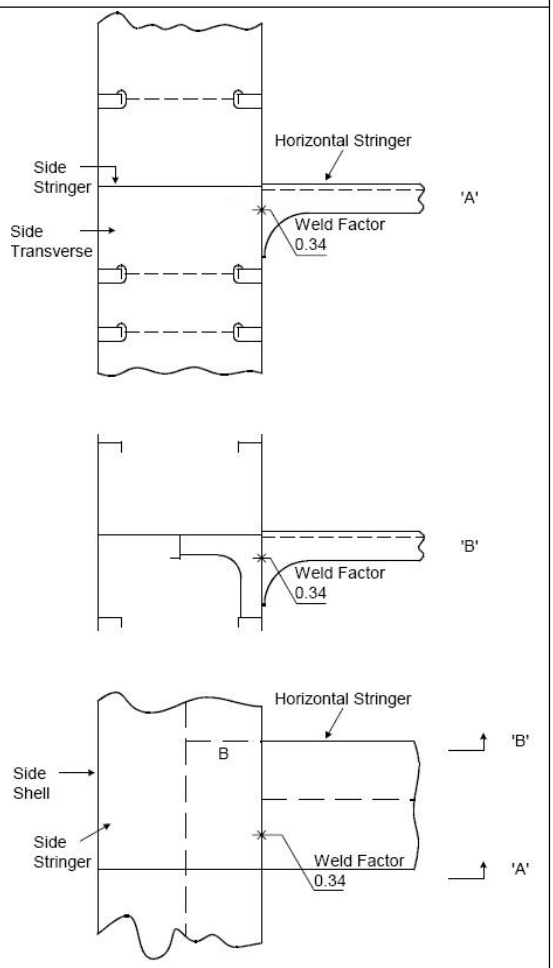
</td></tr>
<tr><td colspan="2">Critical locations</td></tr>
<tr><td colspan="2">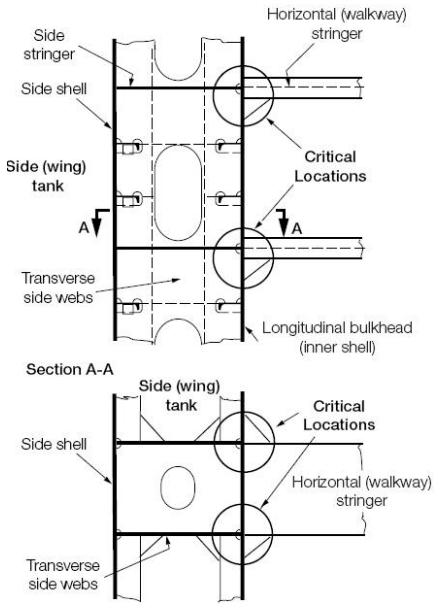
</td></tr>
<tr><td rowspan="2">Structural details</td><td>Applicable structures</td><td colspan="2">Explanations</td></tr>
<tr><td>Connections of face plate of horizontal bulkhead stringers to the longitudinal bulkhead</td><td colspan="2">Symmetrical radiused or integral radiused brackets to reduce stress concentration. Use full collars in longitudinal web plates if toes of face plates end close to longitudinal stiffener cut-outs. Further, side and inner shell longitudinals in way of bulkhead structure is to be fitted with brackets.</td></tr>
<tr><td>Building tolerances</td><td colspan="3">Ensure good alignment of the side web and face plates of stringers and of horizontal side and bulkhead stringers.</td></tr>
<tr><td>Welding requirements</td><td colspan="3">Fillet welding having minimum weld factor of 0.34 (Connection of soft toe brackets to face plates of stringers and to longitudinal bulkhead). A wraparound weld, with smooth transition and free of weld defects, i.e. undercuts, notches etc, around bracket toes. See Section 4, Chapter 1, PART TWO of Rules for Classification of Sea-going Steel Ships for other requirements.</td></tr>
</table>

Structural details of container ships	Table 19

Area: Watertight and non-watertight bulkheads

Critical location: Connections of floor vertical stiffeners to the bottom and inner bottom longitudinals below bulkhead

Critical areas	Structural details
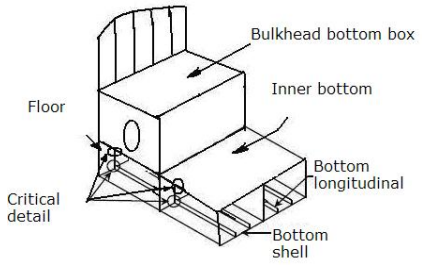	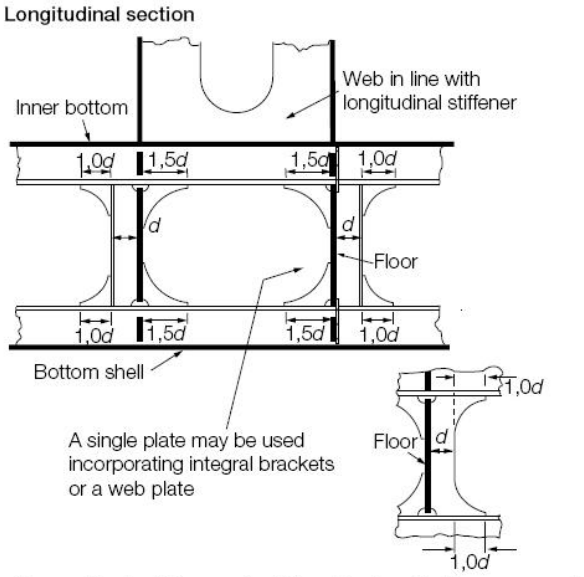
Critical locations	
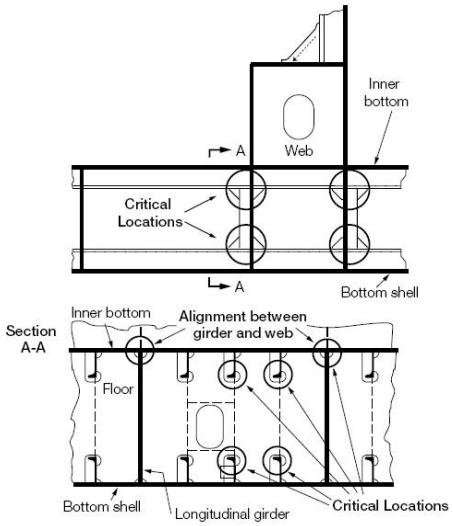	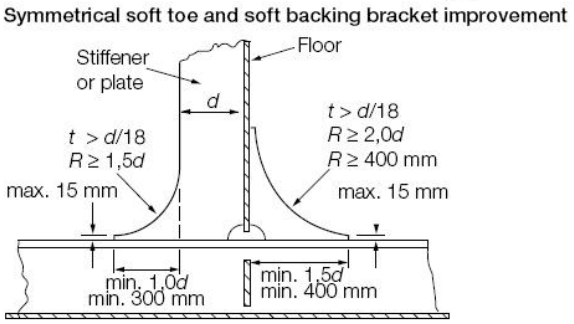

	Applicable structures	Explanations
Structural details	Connections of floor vertical stiffeners to the bottom and inner bottom longitudinals below bulkhead	Fitting of soft brackets reduces stress concentration factor in the vicinity near the connections of floor stiffeners to the bottom and inner bottom longitudinals and the connections of stool to inner bottom plate.
Building tolerances	Ensure good alignment between brackets and stiffener webs. If soft heel is used, the remaining cross-sectional area across the minimum width of the stiffener web is to be verified against the Rule requirements.	
Welding requirements	Use fillet welding with a weld factor of 0.44 between inner bottom and floors. Ensure start and stop of welding is as far away as practicable from the toes of brackets or corners. A wraparound weld, with smooth transition and free of weld defects, i.e. undercuts, notches etc, around the toe connections of the stiffeners and backing brackets to longitudinal. See Section 4, Chapter 1, PART TWO of Rules for Classification of Sea-going Steel Ships for other requirements.	

<table>
<tr><td colspan="3">Structural details of container ships</td><td>Table 20</td></tr>
<tr><td colspan="4">Area: Watertight and non-watertight bulkheads
Critical location: Connections of bulkhead vertical web face plates to the inner bottom structure and first walkway/stringer</td></tr>
<tr><td colspan="2">Critical areas</td><td colspan="2">Structural details</td></tr>
<tr><td colspan="2">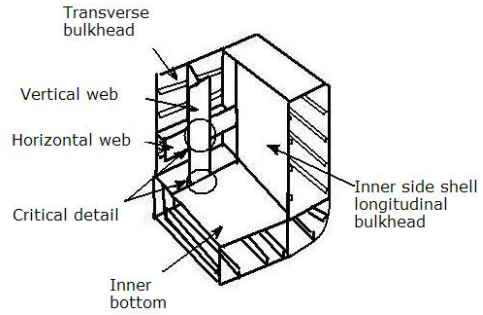
</td><td colspan="2" rowspan="2">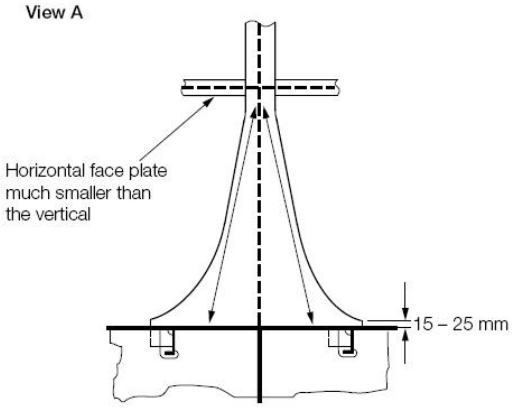

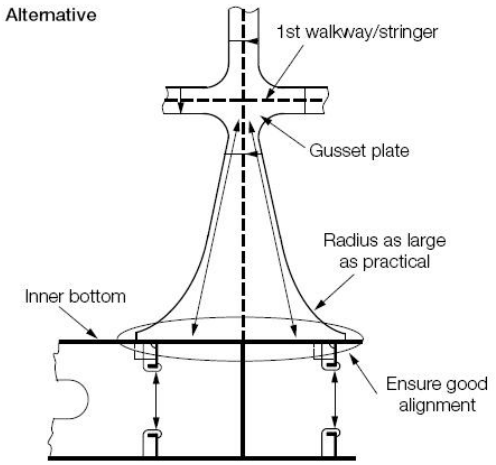
</td></tr>
<tr><td colspan="2">Critical locations</td></tr>
<tr><td colspan="2">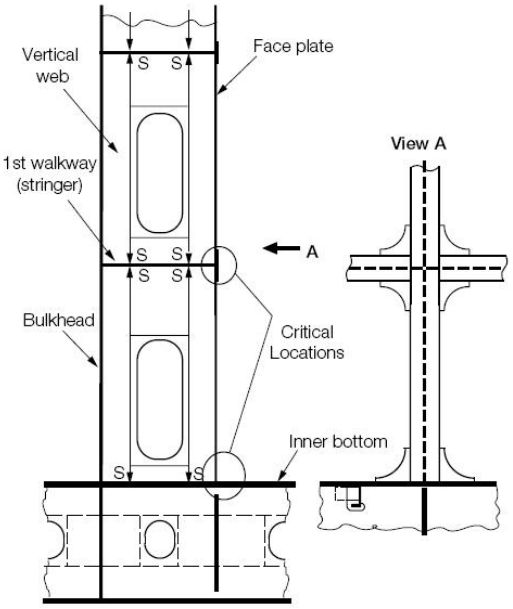
</td></tr>
<tr><td rowspan="2">Structural details</td><td>Applicable structures</td><td>Explanations</td></tr>
<tr><td>Connections of floor vertical stiffeners to the bottom and inner bottom longitudinals below bulkhead</td><td>The face plate toes of the vertical webs are to be terminated clear of a supporting stiffener. Gusset plate is to be fitted at connection of horizontal and vertical webs.</td></tr>
<tr><td>Building tolerances</td><td colspan="2">Ensure good alignment of face plates and webs to floors or bulkheads below.</td></tr>
<tr><td>Welding requirements</td><td colspan="2">A minimum weld factor of 0.34 is to be adopted for the connection of web plate to inner bottom and 0.44 for the face plate to inner bottom. All rounded edges are to be free of notches. A wraparound weld, with smooth transition and free of weld defects, i.e. undercuts, notches etc, around toes of face plates to inner bottom plating. See Section 4, Chapter 1, PART TWO of Rules for Classification of Sea-going Steel Ships for other requirements.</td></tr>
</table>

<table>
<tr><td colspan="3">Structural details of container ships</td><td>Table 21</td></tr>
<tr><td colspan="4">Area: Intermediate decks in forward holds
Critical location: Corner detail in way of stepped longitudinal bulkhead to intermediate deck connection</td></tr>
<tr><td colspan="2">Critical areas</td><td colspan="2">Structural details</td></tr>
<tr><td colspan="2">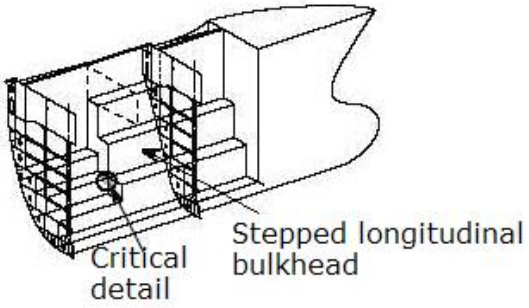
</td><td colspan="2" rowspan="2">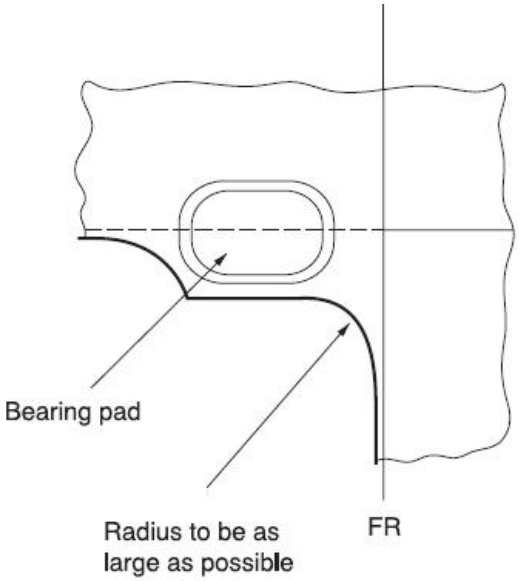
</td></tr>
<tr><td colspan="2">Critical locations</td></tr>
<tr><td colspan="2">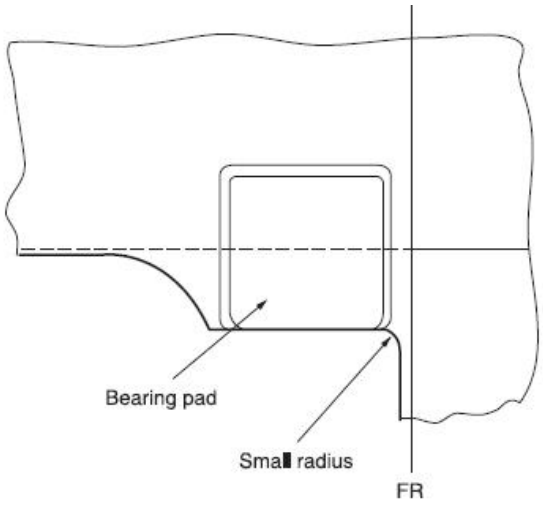
</td><td colspan="2"></td></tr>
<tr><td rowspan="2"></td><td>Applicable structures</td><td colspan="2">Explanations</td></tr>
<tr><td>Structural details</td><td>Corner detail in way of stepped longitudinal bulkhead to intermediate deck connection</td><td colspan="2">The corner detail design may vary with ship design, but in general, the radii at the corner are to be as large as practicable. In addition to the above, it may be considered prudent to fit insert plates of 50% greater thickness than the surrounding plate and of enhanced material grade. See PART TWO of Rules for Classification of Sea-going Steel Ships.</td></tr>
<tr><td>Building tolerances</td><td colspan="3">None</td></tr>
<tr><td>Welding requirements</td><td colspan="3">Welding in way of radii is to be avoided.</td></tr>
</table>